UNIVERSAL ATOMIC DIESEL

MODEL 30

5424 (24 H.P.)

PARTS MANUAL

medalist

Universal Motors

PRICE $10.00

FORM 12-83

PAGE NO.

CRANKCASE GROUP-GASKET SET . . . . . 1 - 2

CYLINDER HEAD GROUP 3

GEAR CASE GROUP . . . . . 4 - 5

BEARING CASE GROUP . . . . . 6 - 7

HEAD COVER GROUP 8

BREATHER GROUP 9

CAMSHAFT GROUP . . . . . 10 -11

VALVE, ROCKER ARM GROUP 12

PISTON CRANKSHAFT GROUP 13

FLYWHEEL GROUP 14

NOZZLE HOLDER GROUP 15

FUEL CAMSHAFT GROUP . . . . . 16 -17

SPEED CONTROL PLATE GROUP . . . . . 18 -19

GOVERNOR GROUP 20

NOZZLE HOLDER GROUP 21

INJECTION PUMP GROUP 22

STARTER GROUP . . . . . 23 -24

OIL FILTER GROUP 25

WATER PUMP GROUP - CIRCULATING 26

WATER PUMP - RAW WATER 26A

FUEL FILTER GROUP 27

AIR CLEANER GROUP 28

ENGINE MOUNT GROUP 29

TRANSMISSION GROUP 30

COUPLINGS 31

THROTTLE LINKAGE CONTROL GROUP 32

DYNAMO GROUP 33

EXHUAST MANIFOLD GROUP 34

COOLING SYSTEM GROUP . . . . . 35 -35A

GASKET SET; SPARE PARTS KIT; INSTRUMENT PANEL 36

WHEN ORDERING PARTS, SPECIFY MODEL AND SERIAL NUMBER OF ENGINE.

This information is absolutely essential for the correct execution of your order. We do not hold ourselves responsible for errors or delays where this is lacking.

SERIAL NUMBER LOCATIONS

Stamped on upper left hand corner of block - ignition side - facing flywheel end (front of engine).

Stamped in block directly above flywheel housing, under front oil filler.

On engine nameplate located on reverse gear housing cover.

On engine nameplate located on engine manifold.

RETURNED PARTS

Parts may be returned for credit subject to authorization by the factory, factory inspection and acceptance upon receipt, and a 15% Re-Stocking charge.

A return goods authorization number must be requested from the factory prior to returning the parts.

All return shipments must be fully PREPAID and clearly marked with shipper's name and address.

LOSS OR DAMAGE IN TRANSIT

Our responsibility ceases upon delivery of shipments to the common carrier. Any claims for loss or damage in transit must be filed with the transportation company.

SHORTAGE CLAIMS

All claims for shortage must be filed within ten (10) days after receipt of shipment and must be accompanied by packing list.

ALL ORDERS FOR REPAIR PARTS MUST BE PLACED THROUGH OUR DISTRIBUTOR/DEALER IN YOUR AREA.

MEDALIST - UNIVERSAL MOTORS
P.O. BOX 2508
OSHKOSH, WI 54903

(414)231-4100 Cable UNIMOT
(508) 585-7100
ATTENTION - SERVICE DEPT.

CRANKCASE GROUP

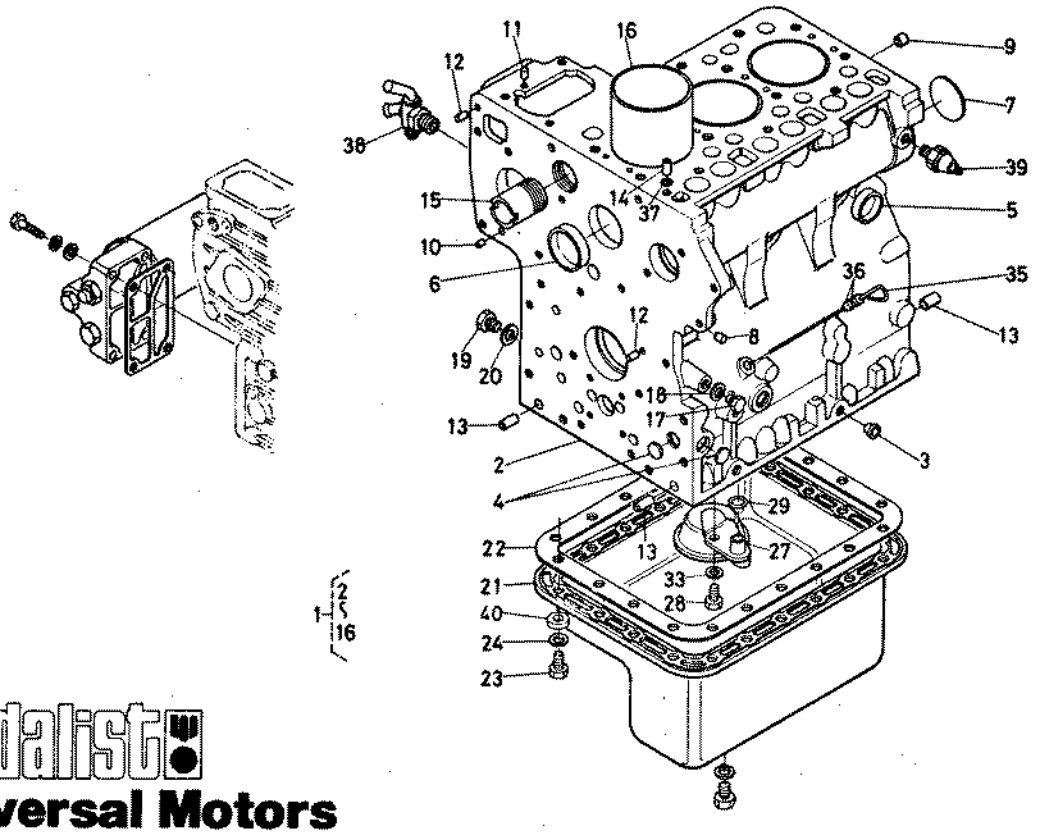

medalist
Universal Motors

ITEM	PART NO.	DESCRIPTION	UNIT
1	298855	Crankcase Assembly	1
2		Crankcase	1
3		Plug	5
4		Plug Expansion	3
5		Cap, Sealing	5
6		Cap, Sealing	2
7		Plug, Expansion	1
8		Plug, Pin	5
9		Plug, Pin	1
10		Pin, Straight	2
11		Pin, Straight	2
12		Pin, Straight	2
13		Pin, Straight	3
14		Pin, Pipe	1
15		Pipe, Water	1
16	298856	Liner, Cylinder	3
17	298658	Plug	1
18	298659	Gasket	1
19	298660	Plug	1
20	298654	Gasket	1
21	298858	Oil Pan	1
22	298859	Oil Pan Gasket	1
23		Bolt	20
24		Washer, Spring	20

CRANKCASE GROUP

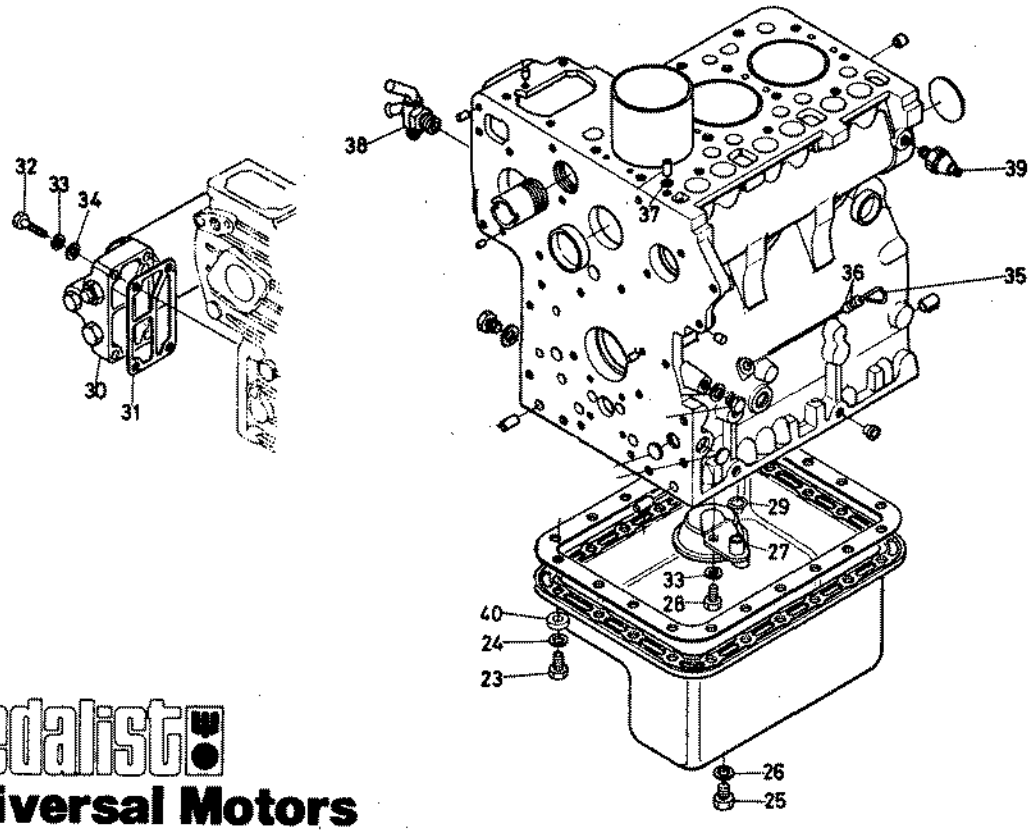

medalist
Universal Motors

ITEM	PART NO.	DESCRIPTION	UNIT
25	298653	Plug	1
26		Gasket	1
27	298656	Oil Filter	1
28		Bolt	1
29	298657	O Ring	1
30	298860	Oil Filter Assembly	1
31		Gasket	1
32		Bolt	4
33		Washer, Spring	5
34		Washer, Plain	4
35	298661	Dipstick	1
36	298662	O Ring	2
37	298665	O Ring	1
38	298664	Drain Cock	1
39	298663	Oil Switch	1
40		Washer, Plain	20
41			
42			
43	256737	Gasket Set	1
44			
45			
46			
47			
48			

CYLINDER HEAD GROUP

medalist Universal Motors

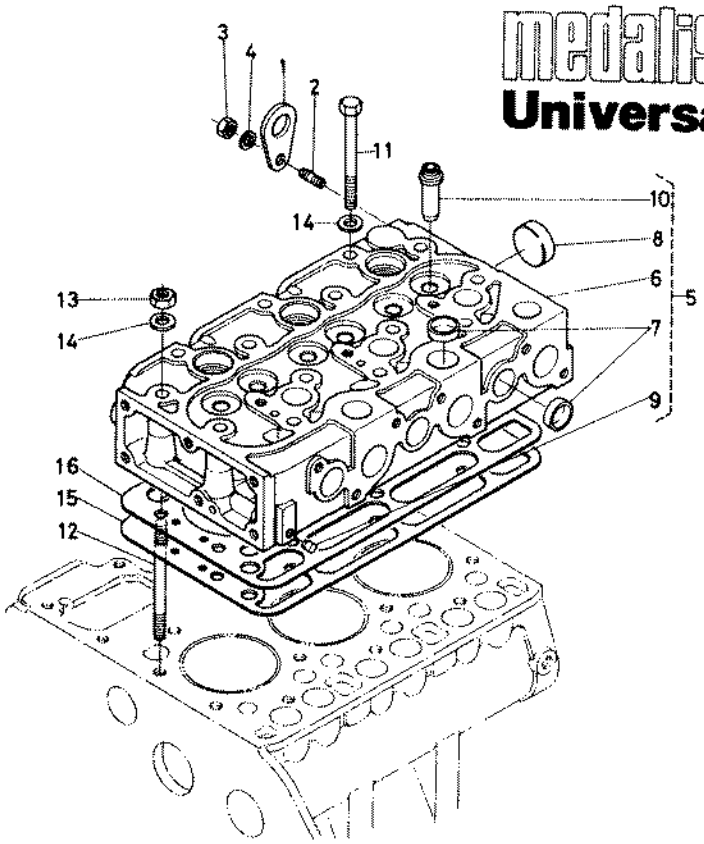

ITEM	PART NO.	DESCRIPTION	UNIT
1	298666	Hook, Engine	2
2		Stud	2
3		Nut	2
4		Washer, Spring	2
5	298861	Cylinder Head Assembly	1
6		Cylinder Head	1
7		Cap, Sealing	9
8		Cap, Sealing	1
9		Plug, Pin	2
10		Guide, Valve	6
11	298668	Bolt, Cylinder Head	12
12	298669	Stud, Cylinder Head	2
13	298620	Nut, Cylinder Head	2
14	298671	Washer, Plain	14
15	298862	Gasket, Cylinder Head	1
16	298863	Shim, Cylinder Head Gasket	1
17			
18			
19			
20			
21			
22			
23			
24			

GEAR CASE GROUP

medalist
Universal Motors

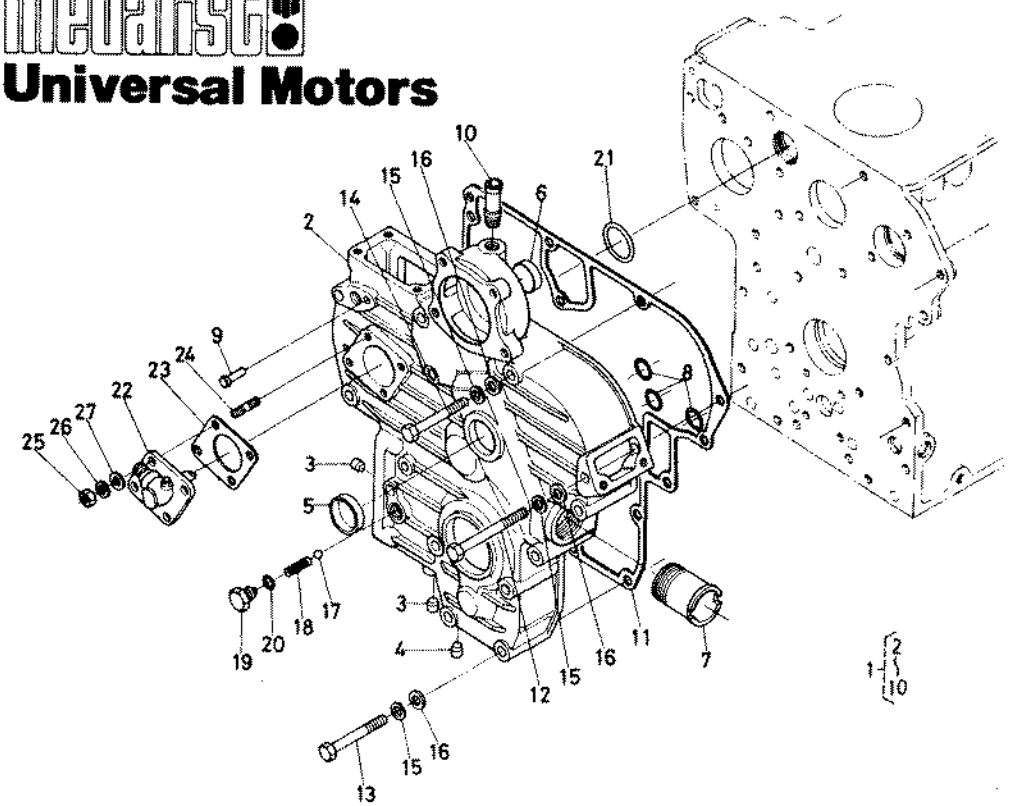

ITEM	PART NO.	DESCRIPTION	UNIT
1	298674	Gear Case Assembly	1
2		Gear Case	1
3		Plug, Pin	2
4		Plug, Pin	1
5		Cap, Sealing	1
6		Cap, Sealing	1
7		Pipe, Water	1
8		O Ring	3
9		Pin, Start Spring	1
10		Pipe, Water Return	1
11	298675	Gasket, Gear Case	1
12		Bolt	1
13	298676	Bolt	10
14		Bolt	3
15		Washer, Spring	14
16		Washer, Plain	14
17	298677	Ball	1
18	298678	Spring	1
19	298679	Cap	1
20	298680	O Ring	1
21	298681	O Ring	1
22		Hour Meter Assembly	1
23	298485	Gasket	1
24	298683	Stud	4

medalist
Universal Motors

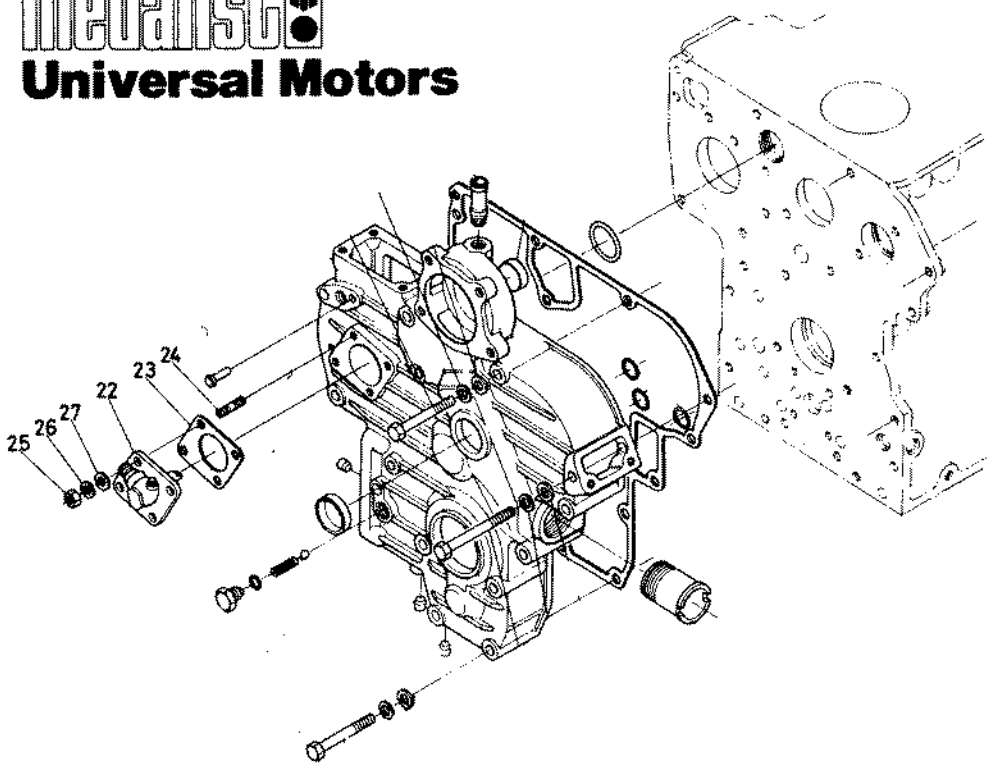

ITEM	PART NO.	DESCRIPTION	UNIT
25	298684	Nut	4
26		Washer, Spring	4
27		Washer, Plain	4
28	298477-B	Adaptor Plate	1
29			
30			
31			
32			
33			
34			
35			
36			
37			
38			
39			
40			
41			
42			
43			
44			
45			
46			
47			
48			

BEARING CASE GROUP

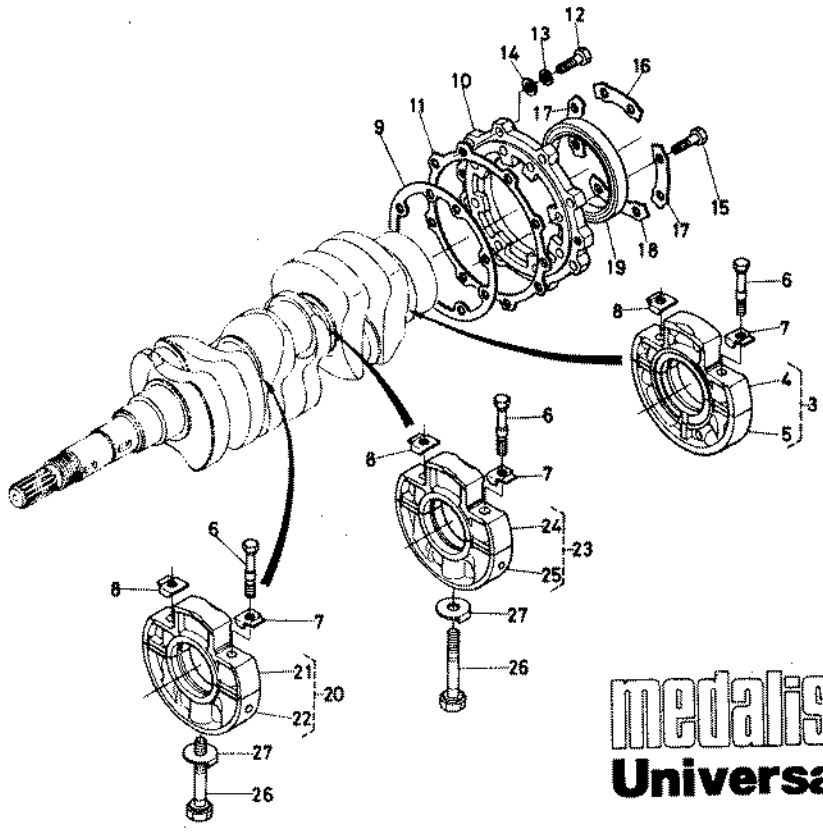

medalist Universal Motors

ITEM	PART NO.	DESCRIPTION	UNIT
1			
2			
3	298685	Bearing Case Assembly	1
4		Case, Main Bearing - 1	1
5		Case, Main Bearing - 2	1
6	298686	Bolt - 1	6
7	298687	Washer, Lock - 1	3
8	298688	Washer, Lock - 2	3
9	298689	Gasket	1
10	298690	Cover, Bearing	1
11	298691	Gasket, Cover	1
12		Bolt	8
13		Washer, Spring	8
14		Washer, Plain	8
15		Bolt	8
16	298692	Washer, Cover - 1	1
17	298693	Washer, Cover - 2	2
18	298694	Washer, Cover - 3	1
19	298695	Seal - Oil	1
20	298696	Case Bearing Assembly - 1	1
21		Case, Bearing 1-1	1
22		Case, Bearing 1-2	1
23		Case Bearing Assembly - 2	1
24		Case Bearing 2-1	1

BEARING CASE GROUP

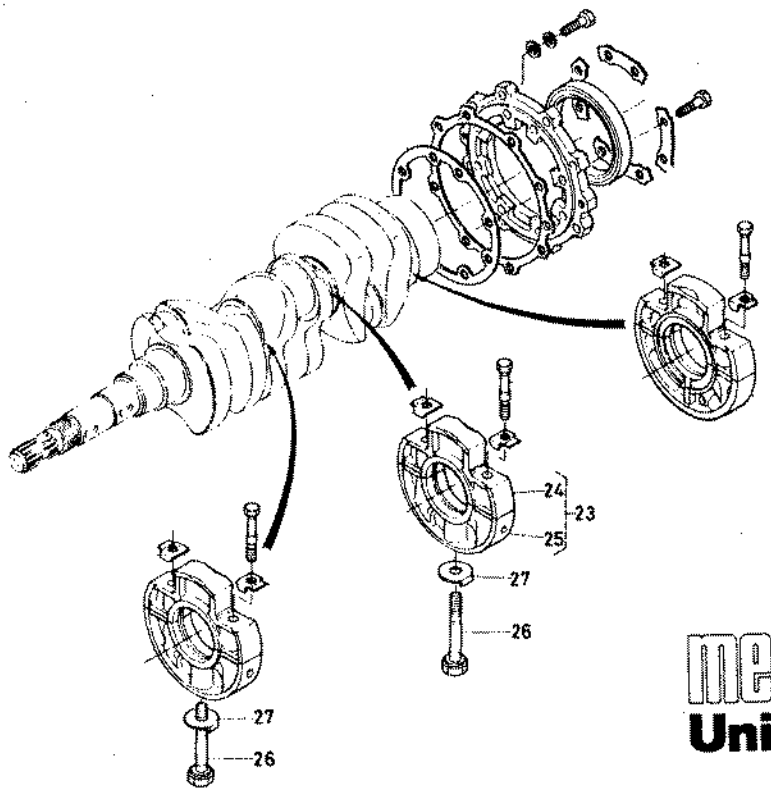

medalist
Universal Motors

ITEM	PART NO.	DESCRIPTION	UNIT
25		Case Bearing 2-2	1
26	298697	Bolt - 2	2
27	298698	Washer, Lock - 3	2
28			
29			
30			
31			
32			
33			
34			
35			
36			
37			
38			
39			
40			
41			
42			
43			
44			
45			
46			
47			
48			

HEAD COVER GROUP

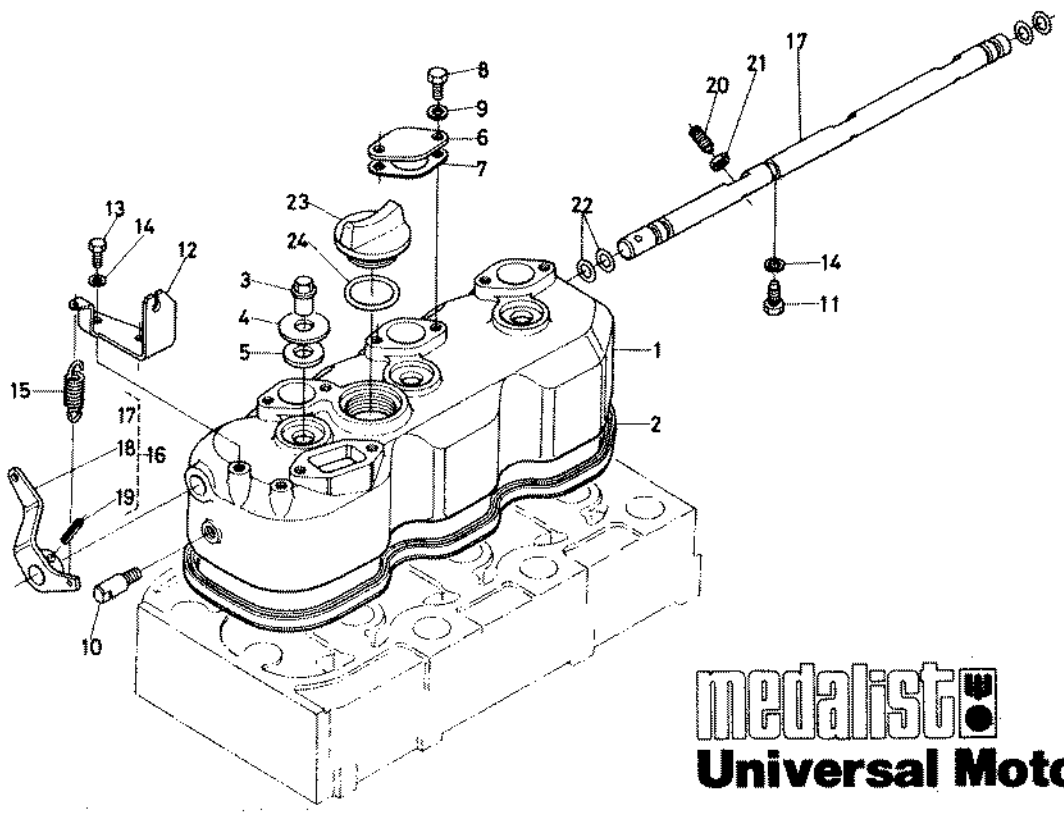

medalist Universal Motors

ITEM	PART NO.	DESCRIPTION	UNIT
1	298868	Cylinder Head Cover	1
2	298869	Gasket, Head Cover	1
3	298726	Nut, Head Cover	3
4	298727	Washer, Head Cover	3
5	298728	Gasket, Nut	3
6	298729	Cover, Decompression Hole	3
7	298730	Gasket, Cover	3
8		Bolt	6
9		Washer, Spring	6
10	298731	Stopper, Decompression	1
11	298732	Bolt	1
12	298733	Holder, Decompression Wire	1
13		Bolt	2
14		Washer, Spring	3
15	298734	Spring, Decompression	1
16	298870	Decompression Shaft Assembly	1
17		Shaft, Decompression	1
18		Lever, Decompression	1
19		Pin, Spring	1
20	298736	Bolt, Decompression	3
21	298737	Nut, Decompression	3
22	298738	O Ring	4
23	298739	Plug, Oil Filter	1
24	298740	O Ring	1

BREATHER GROUP

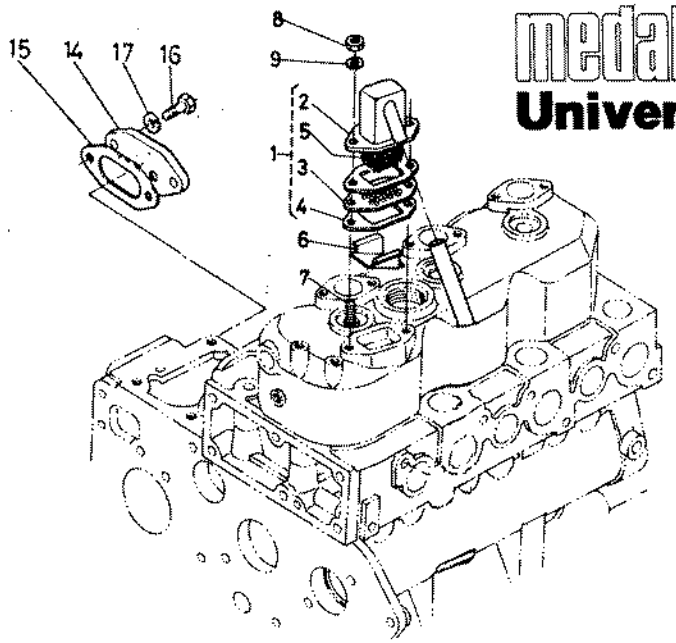

medalist
Universal Motors

ITEM	PART NO.	DESCRIPTION	UNIT
1		Breather Assembly	1
2	298699	Breather	1
3	298700	Plate, Element	1
4	298701	Gasket, Cover	2
5	298702	Element, Breather	1
6	298703	Oil Shield, Breather	1
7		Stud	2
8		Nut	2
9		Washer, Spring	2
10	298704	Hose, Breather	1
11			
12			
13			
14		Cover	1
15		Packing, Cover	1
16		Bolt	2
17		Washer, Spring	2
18			
19			
20			
21			
22			
23			
24			

CAMSHAFT GROUP

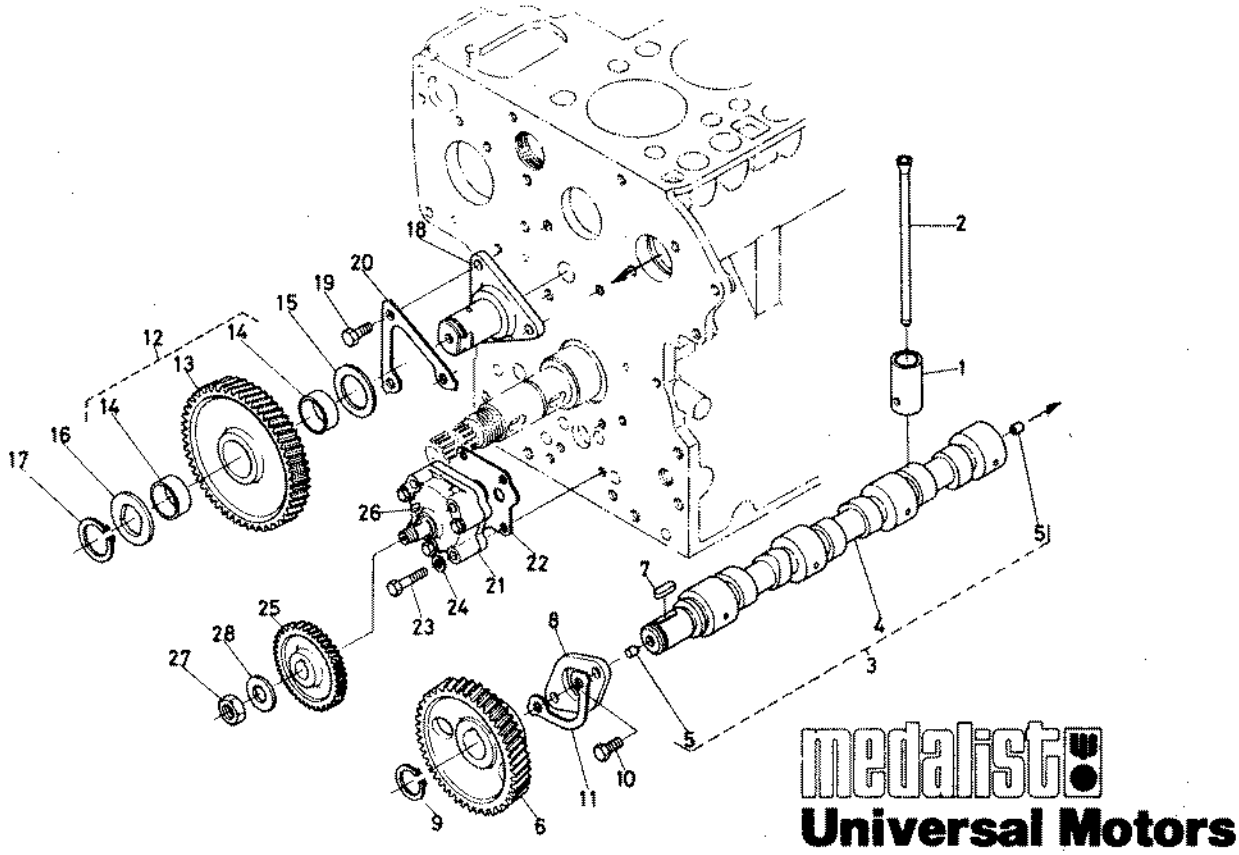

ITEM	PART NO.	DESCRIPTION	UNIT
1	298741	Tappet	6
2	298742	Rod, Push	6
3		Camshaft Assembly	1
4	298871	Camshaft	1
5	298744	Plug, Pin	2
6	298745	Gear, Camshaft	1
7	298746	Key, Feather	1
8	298747	Stopper, Camshaft	1
9	298748	Cir-Clip, External	1
10		Bolt	2
11	298749	Washer, Stopper	1
12	298750	Idler Gear Assembly	1
13		Gear, Idle	1
14		Bushing, Idle Gear	2
15	298751	Collar 1, Idle Gear	1
16	298752	Collar 2, Idle Gear	1
17	298753	Cir-Clip, Idle Gear	1
18	298754	Shaft, Idle Gear	1
19		Bolt	3
20	298755	Washer, Idle Gear Shaft	1
21	298872	Oil Pump Assembly	1
22	298756	Gasket, Oil Pump	1
23		Bolt	4
24		Washer, Spring	4

CAMSHAFT GROUP

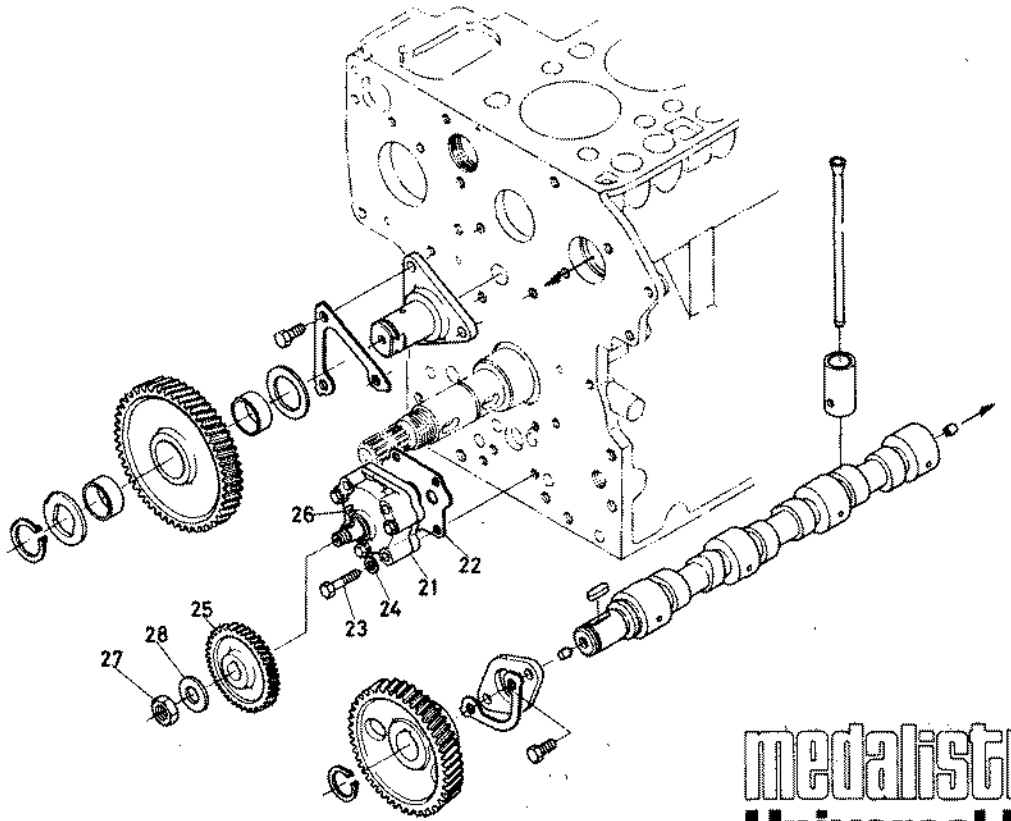

medalist
Universal Motors

ITEM	PART NO.	DESCRIPTION	UNIT
25	298757	Gear, Oil Pump Drive	1
26	298758	Key, Feather	1
27	298759	Nut	1
28	298760	Washer	1
29			
30			
31			
32			
33			
34			
35			
36			
37			
38			
39			
40			
41			
42			
43			
44			
45			
46			
47			
48			

VALVE, ROCKER ARM GROUP

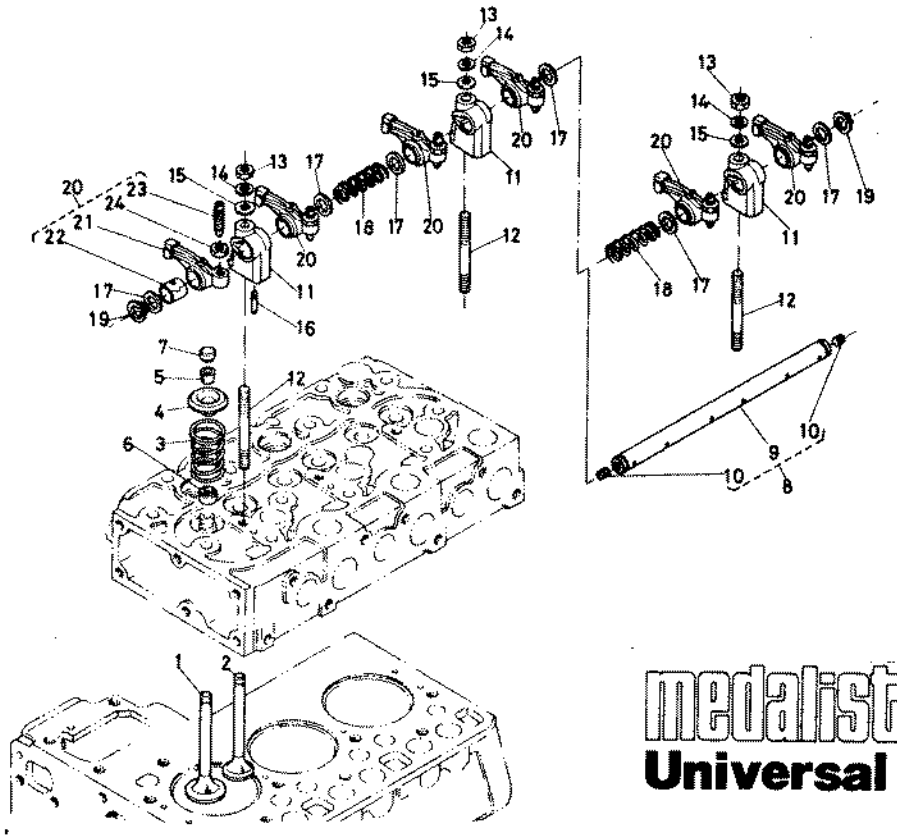

medalist Universal Motors

ITEM	PART NO.	DESCRIPTION	UNIT
1	298709	Inlet Valve	3
2	298710	Exhaust Valve	3
3	298711	Spring, Valve	6
4	298712	Retainer, Valve Spring	6
5	298713	Collet, Valve Spring	12
6	298714	Seal, Valve Stem	6
7	298715	Cap, Valve	6
8	298867	Rocker Arm Shaft Assembly	1
9		Shaft, Rocker Arm	1
10		Screw, Set	2
11	298717	Bracket, Rocker Arm	3
12	298718	Stud	3
13		Nut	3
14		Washer, Spring	3
15		Washer, Plain	3
16	298719	Screw, Set	1
17	298720	Washer	6
18	298721	Spring, Rocker Arm	2
19	298722	Cir-Clip, External	2
20	298723	Rocker Arm Assembly	6
21		Rocker Arm	1
22		Bush	1
23		Screw, Adjusting	1
24		Nut	1

PISTON, CRANKSHAFT GROUP

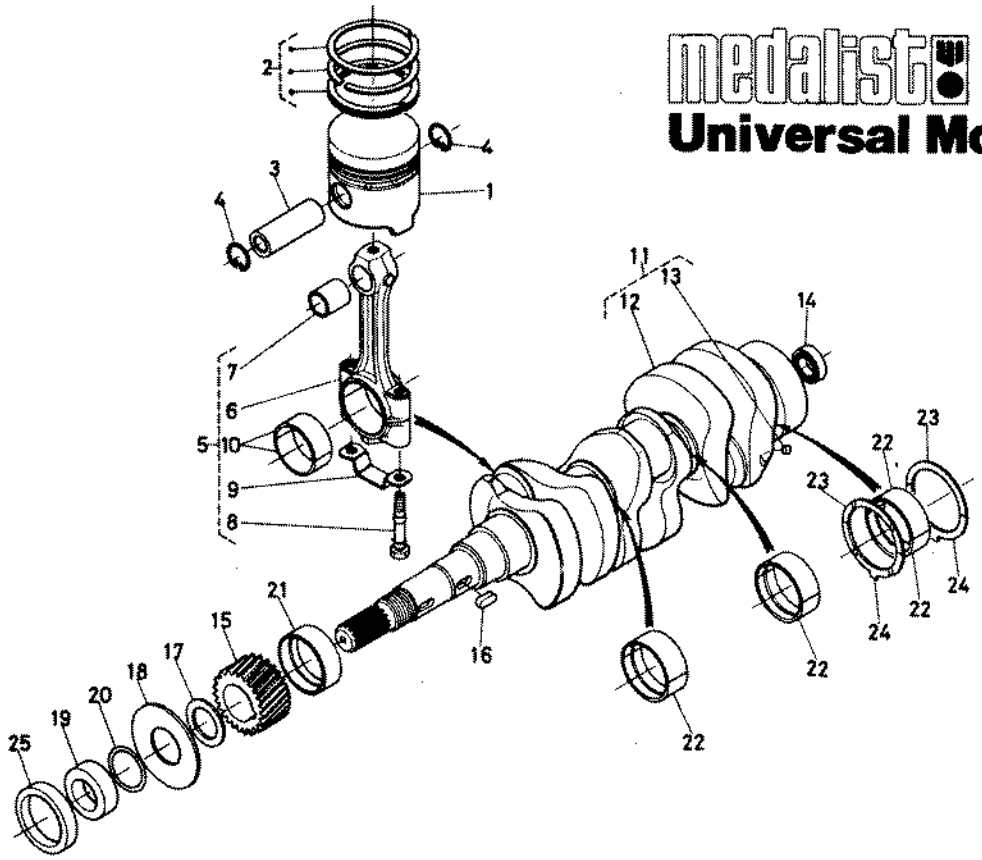

ITEM	PART NO.	DESCRIPTION	UNIT
1	298762	Piston	3
2	298763	Piston Ring Assembly	3
3	298764	Piston Pin	3
4	298765	Cir-Clip, Piston Pin	6
5	298766	Connecting Rod Assembly	3
6		Connecting Rod	1
7		Bushing, Piston Pin	1
8		Bolt, Connecting Rod	2
9		Washer, Rod Bolt	1
10	298767	Rod Bearing	2
11	298873	Crankshaft Assembly	1
12		Crankshaft	1
13		Plug, Pin	3
14		Bearing Ball	1
15	298769	Gear, Crankshaft	1
16		Key, Feather	1
17	298770	Collar, Crank-Gear	1
18	298771	Oil Slinger	1
19	298772	Collar, Crankshaft	1
20	298773	O Ring	1
21	298775	Metal, Crankshaft	1
22	298776	Metal, Crankshaft	6
23	298777	Metal, Side	2
24	298778	Metal, Side	2
25	298774	Oil Seal	1

FLYWHEEL GROUP

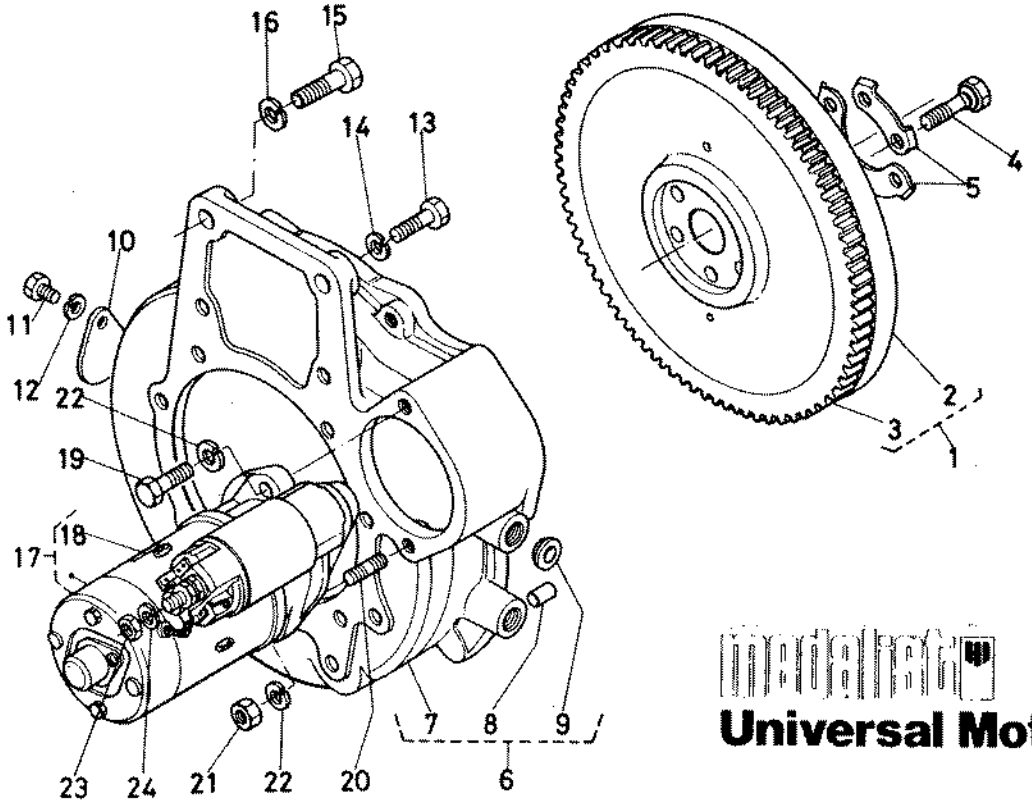

Universal Motors

ITEM	PART NO.	DESCRIPTION	UNIT
1	298874	Flywheel Assembly	1
2		Flywheel	1
3		Gear, Ring	1
4	298780	Bolt, Flywheel	6
5	298781	Washer, Flywheel	3
6	298875	Flywheel Housing Assembly	1
7		Housing, Flywheel	1
8		Pin, Straight	2
9		Plug	4
10		Cover	1
11		Bolt	1
12		Washer, Spring	1
13		Bolt	11
14		Washer, Spring	11
15		Bolt	2
16		Washer, Spring	2
17	298876	Starter Assembly	1
18		Mark, From	1
19		Bolt	1
20		Stud	1
21		Nut	1
22		Washer, Spring	2
23		Nut	1
24		Washer, Spring	1

NOZZLE HOLDER GROUP

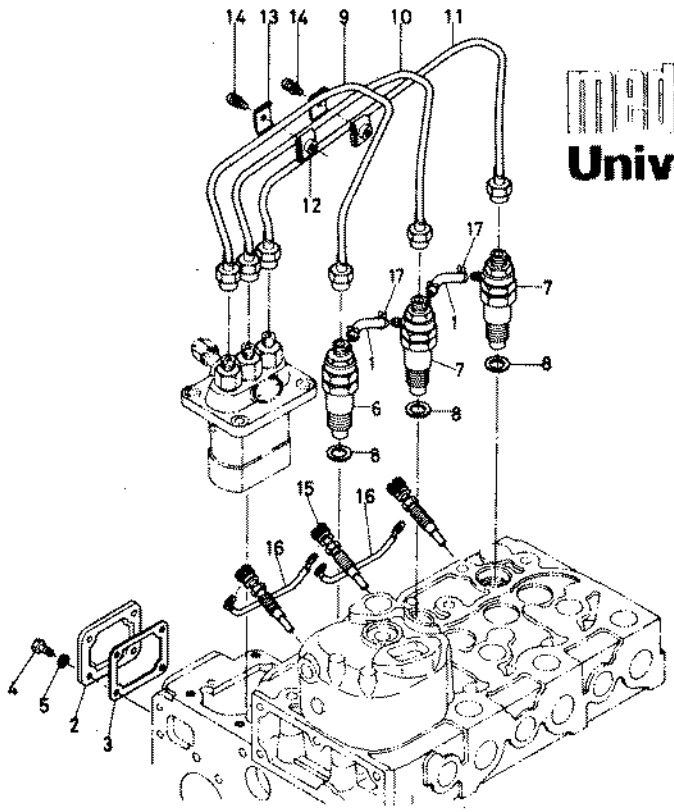

Universal Motors

ITEM	PART NO.	DESCRIPTION	UNIT
1	298784	Pipe, Fuel Overflow	2
2	298785	Cover, Injection Pump	1
3	298786	Gasket, Pump Cover	1
4		Bolt	4
5		Washer, Spring	4
6	298787	Nozzle Holder Assembly	1
7	298788	Nozzle Holder Assembly	2
8	298789	Gasket	3
9	298790	Pipe, Injection	1
10	298791	Pipe, Injection	1
11	298877	Pipe, Injection	1
12	298792	Clamp, Pipe	2
13	298793	Clamp, Pipe	2
14	298794	Screw, With Washer	2
15	298795	Glow Plug	3
16	298796	Cord, Glow Plug	2
17	298797	Clip, Pipe	4
18			
19			
20			
21			
22			
23			
24			

FUEL CAMSHAFT GROUP

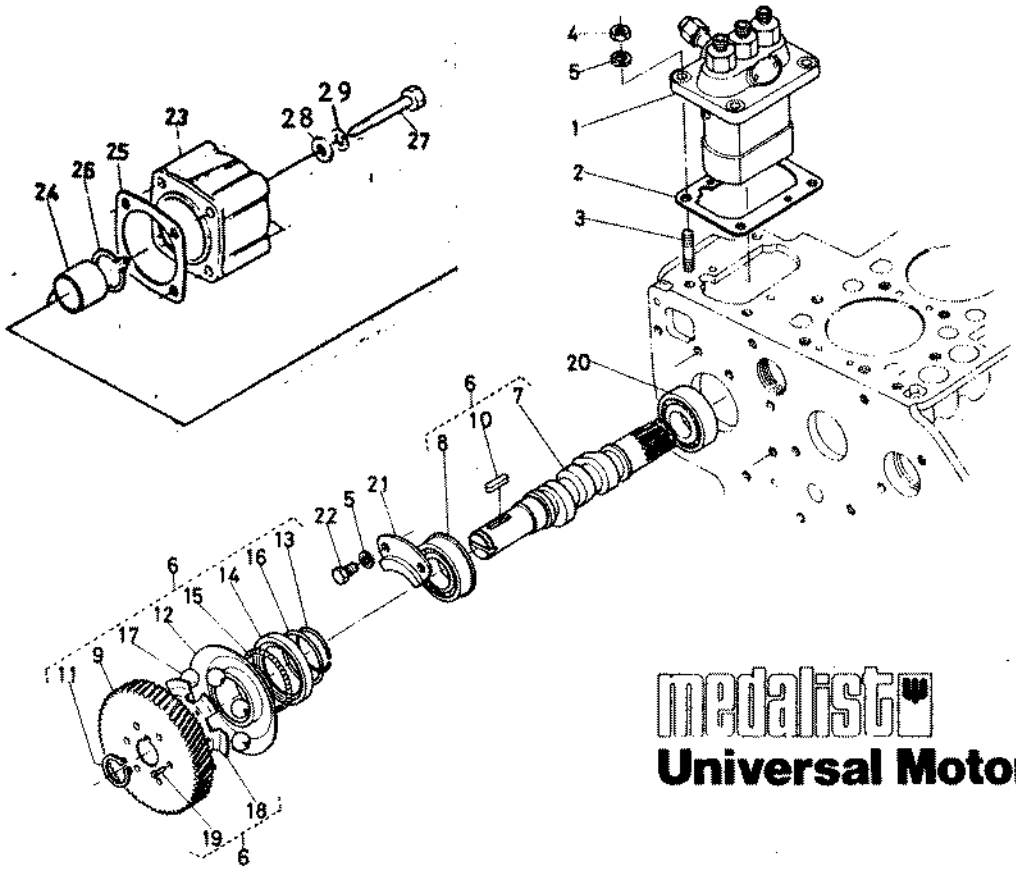

medalist
Universal Motors

ITEM	PART NO.	DESCRIPTION	UNIT
1	298878	Injection Pump Assembly	1
2	298879	Shim, Injection Pump	5
3		Stud	4
4		Nut	4
5		Washer, Spring	6
6		Fuel Camshaft Assembly	1
7	298880	Camshaft, Fuel	1
8	298811	Bearing, Ball	1
9	298800	Gear, Injection Pump	1
10	298801	Key, Feather	1
11	298810	Cir-Clip, External	1
12	298802	Sleeve, Governor	1
13	298803	Cir-Clip, Sleeve	1
14	298804	Case, Governor Ball	1
15	298805	Ball	39
16	298806	Cir-Clip, Ball Case	1
17	298807	Ball	6
18	298808	Guide, Governor Ball	1
19	298809	Rivet	6
20		Bearing, Ball	1
21	298812	Stopper, Camshaft	1
22		Bolt	2
23	298813	Cover, Fuel Camshaft	1
24	298815	Collar	1

FUEL CAMSHAFT GROUP

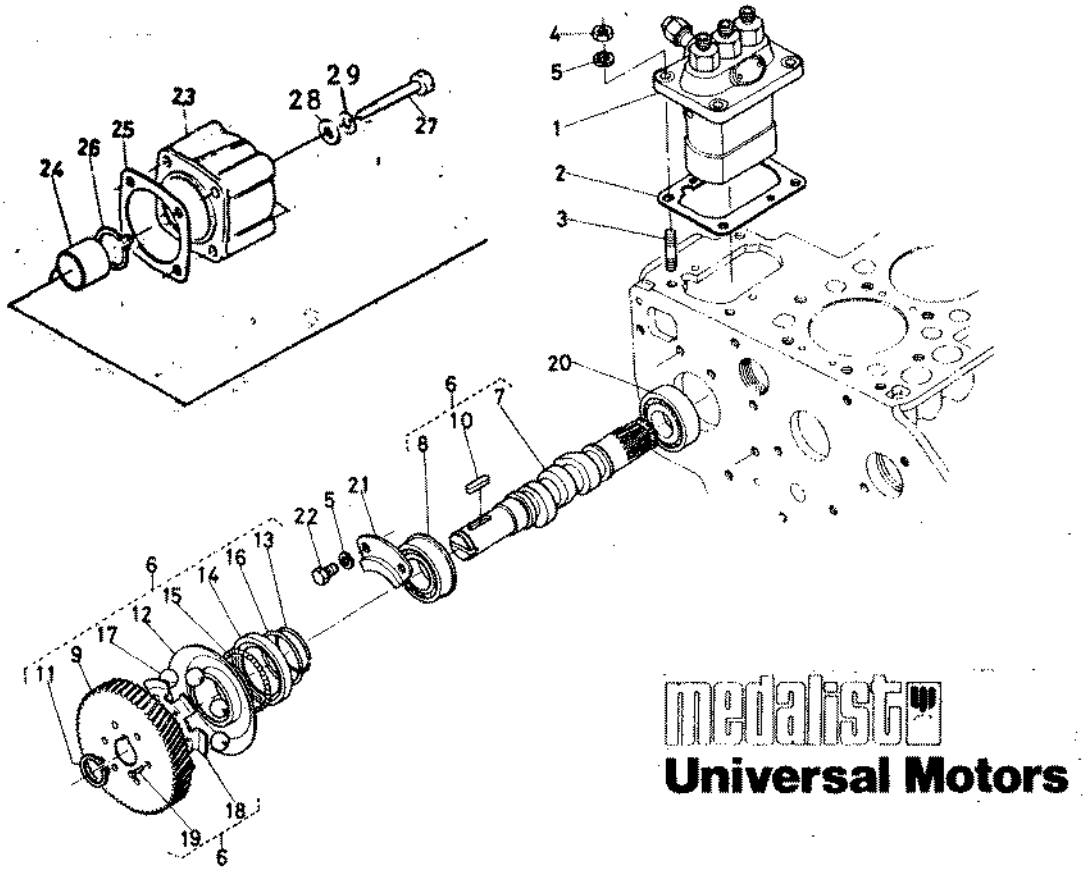

ITEM	PART NO.	DESCRIPTION	UNIT
25	298814	Gasket	1
26	298817	Cir-Clip, External	1
27			
28			
29			
30			
31			
32			
33			
34			
35			
36			
37			
38			
39			
40			
41			
42			
43			
44			
45			
46			
47			
48			

SPEED CONTROL PLATE GROUP

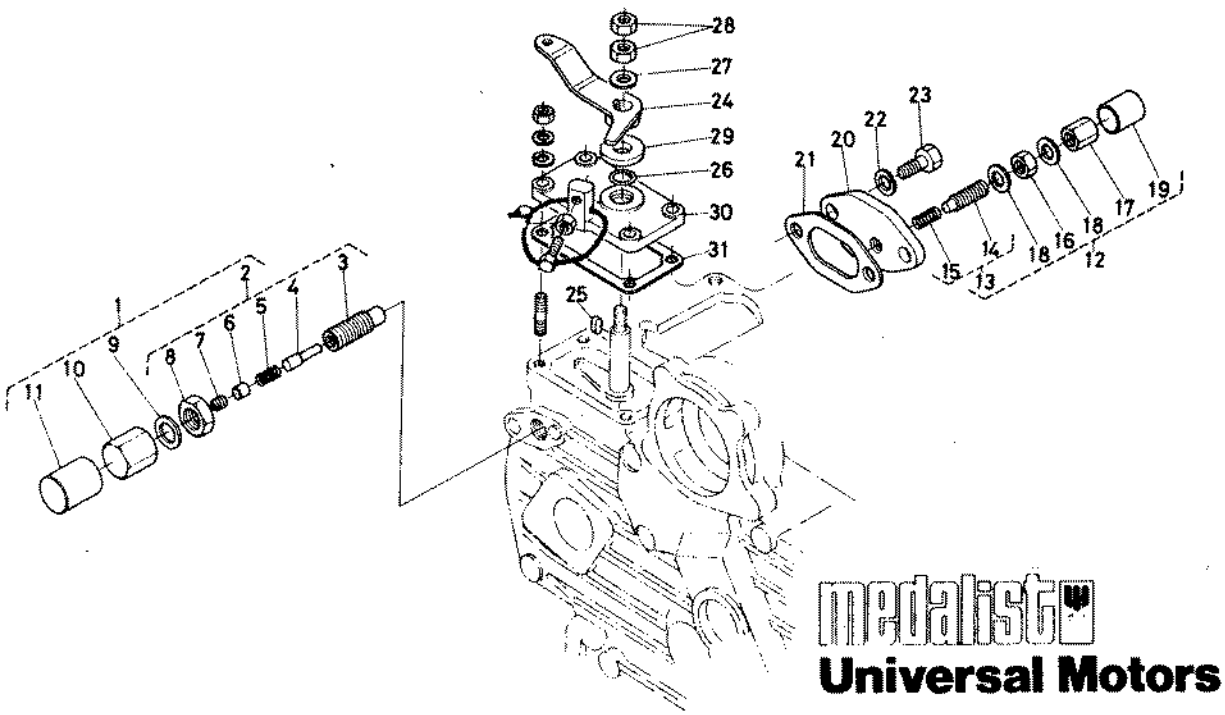

ITEM	PART NO.	DESCRIPTION	UNIT
1		Assembly Apparatus, Fuel	1
2	298818	Assembly Apparatus, Fuel	1
3		Body	1
4		Pin	1
5		Spring	1
6		Spacer	1
7		Screw, Set	1
8		Nut, Lock	1
9		Gasket	2
10		Nut, Cap	1
11		Cap	1
12		Idle Apparatus Assembly	1
13		Adjusting Bolt Assembly	1
14		Bolt, Adjusting	1
15		Spring	1
16		Nut	1
17		Nut, Cap	1
18	[illegible]	Gasket	1
19		Cap	1
20	298881	Cover	1
21	298882	Gasket	1
22		Washer, Spring	2
23		Bolt	2
24	298819	Lever, Speed Control	1

SPEED CONTROL PLATE GROUP

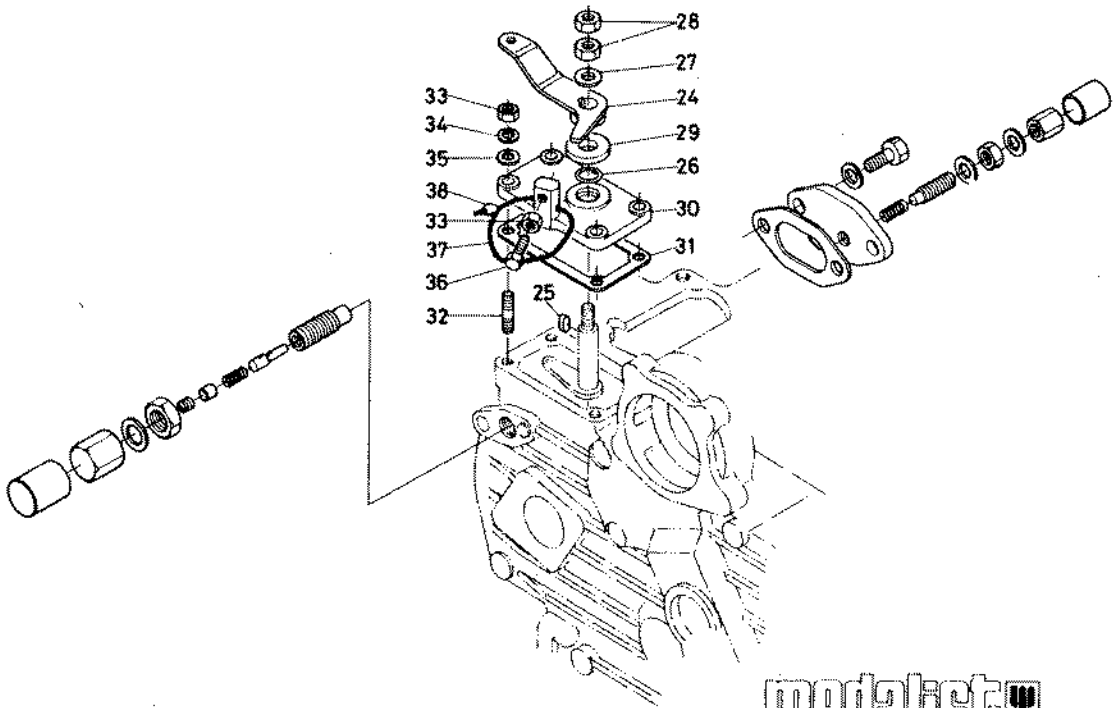

medalist
Universal Motors

ITEM	PART NO.	DESCRIPTION	UNIT
25	298820	Key, Feather	1
26	298821	O Ring	1
27		Washer, Plain	1
28		Nut	2
29	298822	Plate, Friction	1
30	298823	Plate, Speed Control	1
31	298824	Gasket, Cont. Plate	1
32	298825	Stud	4
33		Nut	5
34		Washer, Spring	4
35		Washer, Plain	4
36	298826	Stopper	1
37		Wire	1
38		Lead, Sealing	1
39			
40			
41			
42			
43			
44			
45			
46			
47			
48			

GOVERNOR GROUP

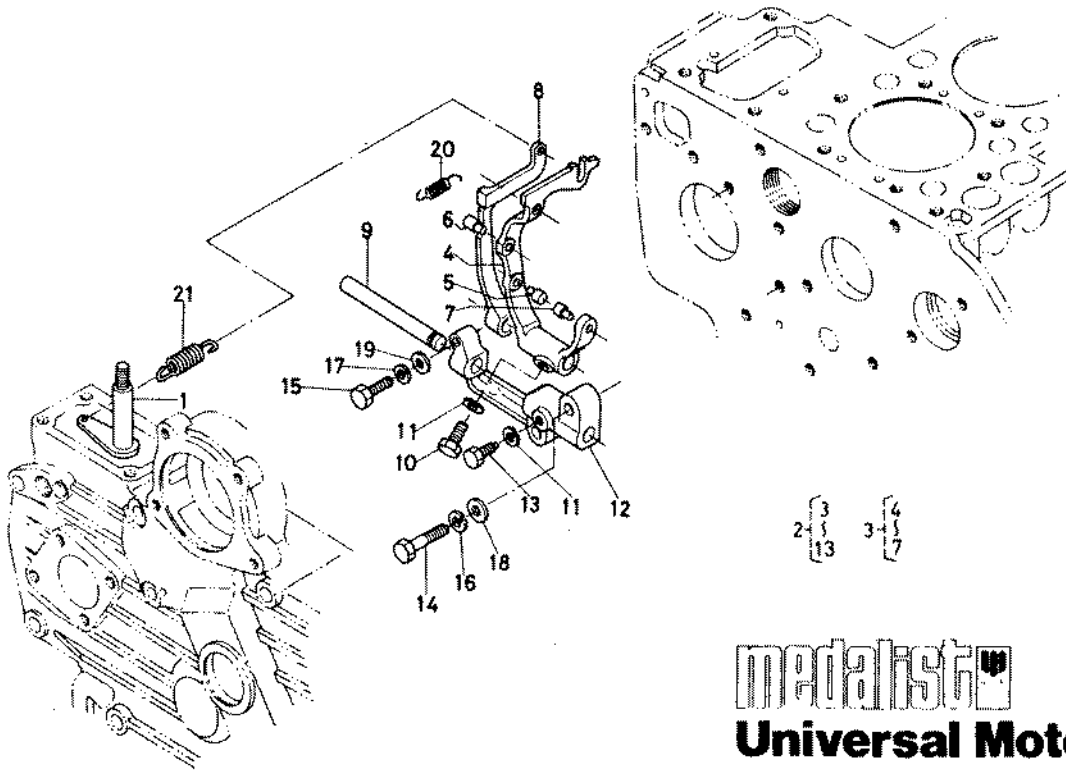

medalist
Universal Motors

ITEM	PART NO.	DESCRIPTION	UNIT
1		Governor Lever Assembly	1
2		Fork Lever Assembly	1
3	298830	Fork Lever Assembly	1
4		Fork Lever	1
5		Pin, Fork Lever	1
6		Pin, Fork Lever	1
7		Pin, Fork Lever	1
8	298831	Lever, Fork	1
9	298832	Fork Lever Shaft	1
10	298833	Bolt, Lever Shaft	1
11		Washer, Spring	2
12	298834	Holder, Fork Lever	1
13	298835	Bolt	1
14		Bolt	2
15		Bolt	1
16		Washer, Spring	2
17		Washer, Spring	1
18		Washer, Plain	2
19		Washer, Plain	1
20	298828	Spring, Start	1
21	298829	Spring, Governor	1
22			
23			
24			

NOZZLE HOLDER GROUP

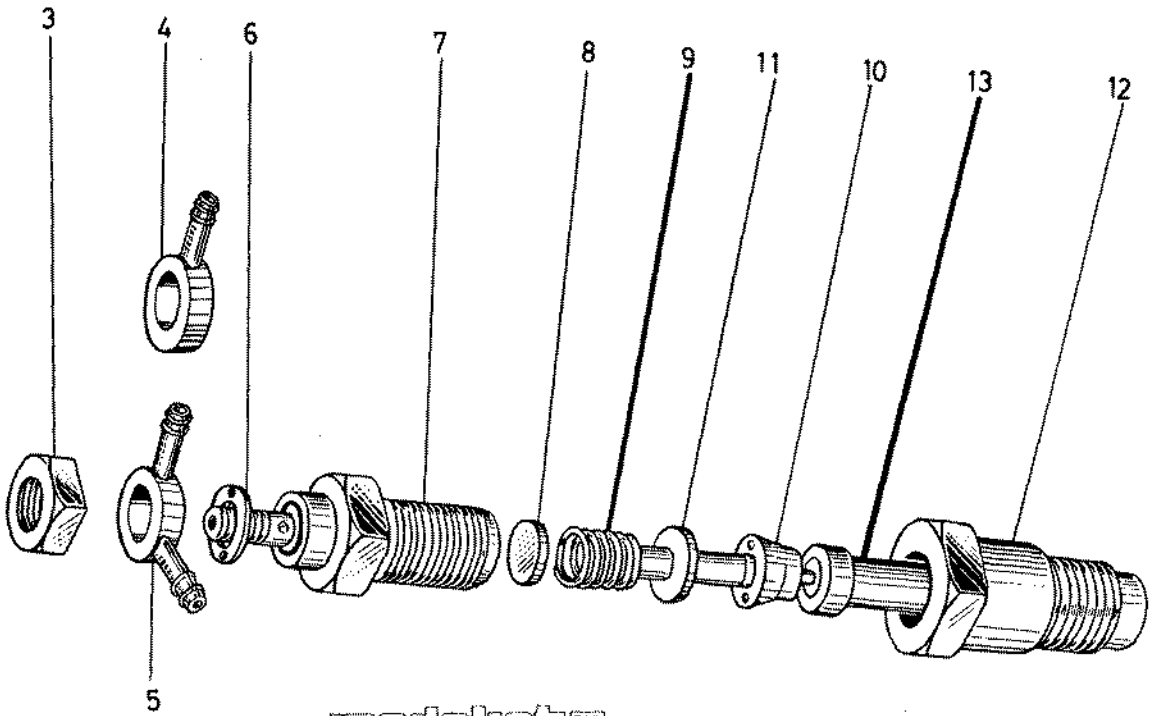

medalist
Universal Motors

ITEM	PART NO.	DESCRIPTION	UNIT
1	298787	Nozzle Holder Assembly	1
2	298788	Nozzle Holder Assembly	2
3		Nut	1
4		Joint, Eye	1
5		Joint, Eye	2
6		Washer, Plain	1
7		Body, Nozzle Holder	1
8		Washer, Adjusting	1
9		Spring, Nozzle	1
10		Distance Piece	1
11		Push Rod	1
12		Nozzle Nut	1
13		Nozzle Piece	1
14			
15			
16			
17			
18			
19			
20			
21			
22			
23			
24			

INJECTION PUMP GROUP

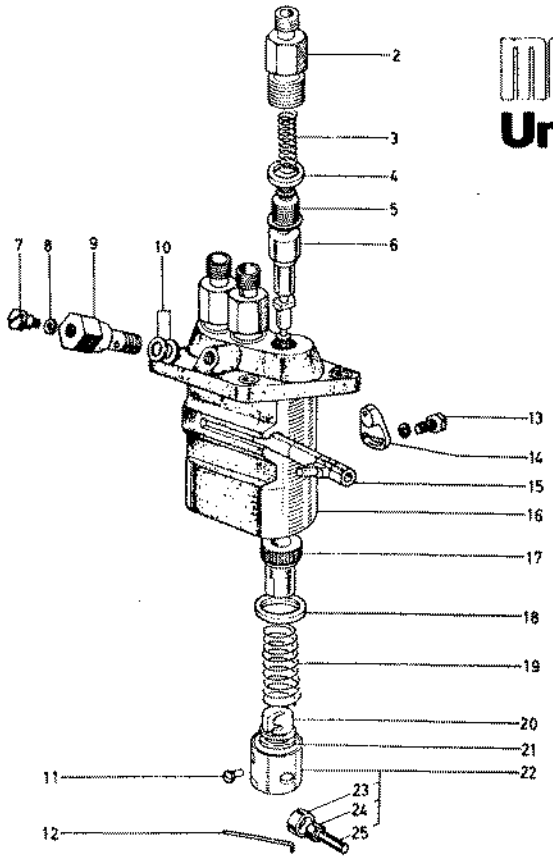

medalist
Universal Motors

ITEM	PART NO.	DESCRIPTION	UNIT
1			
2		Holder, Delivery Valve	3
3		Spring, Delivery Valve	3
4		Gasket, Delivery Valve	3
5		Valve, Delivery	3
6		Pump Element	3
7		Screw	1
8		Gasket	1
9		Screw	1
10		Gasket	2
11		Pin, Tappet Guide	3
12		Pin, Crank	1
13		Bolt	2
14		Plate, Adjusting	2
15		Pack Control	1
16		Housing, Pump	1
17		Sleeve Control	3
18		Seat, Spring Upper	2
19		Spring, Plunger	3
20		Seat, Spring Lower	3
21		Shim	3
22		Tappet Assembly	3
23		Roller	3
24		Bushing, Roller	3
25		Pin, Roller	3

STARTER GROUP

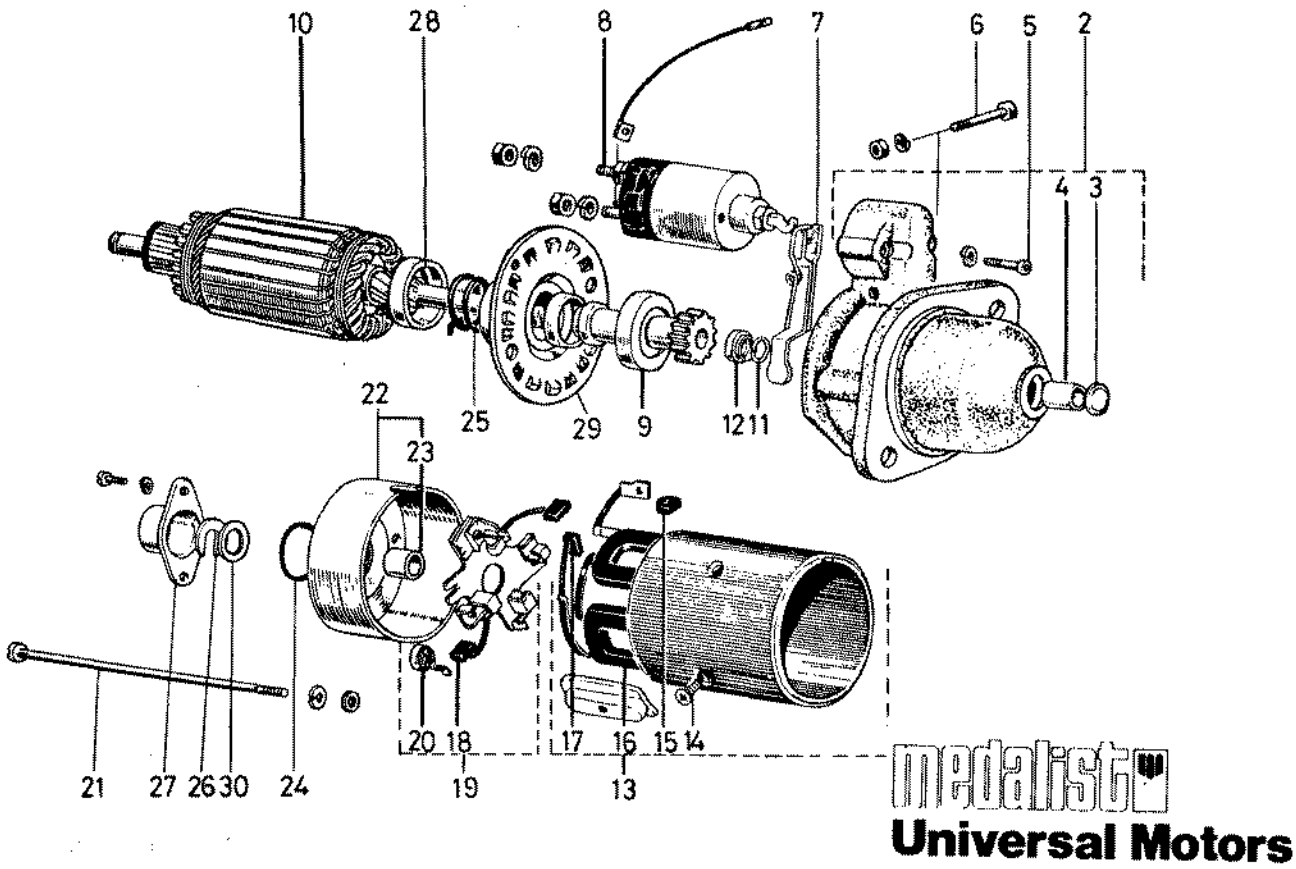

ITEM	PART NO.	DESCRIPTION	UNIT
1			
2		Drive End Frame	1
3		Plug, Belch	1
4	299770	Bush	1
5		Bolt, Set	1
6		Bolt	2
7		Lever, Drive	1
8	299649	Clutch, Magnet	1
9	299779	Clutch	1
10	299780	Armature	1
11		Pin, Snap	1
12		Collar	1
13		Yoke	1
14		Bolt, Set	2
15		Gasket	1
16		Coil, Field	1
17	299781	Brush	2
18	299782	Brush	2
19		Holder, Brush	1
20	299776	Spring, Brush	4
21		Bolt	2
22		End Frame	1
23	299777	Bush	1
24		Gasket	1

STARTER GROUP

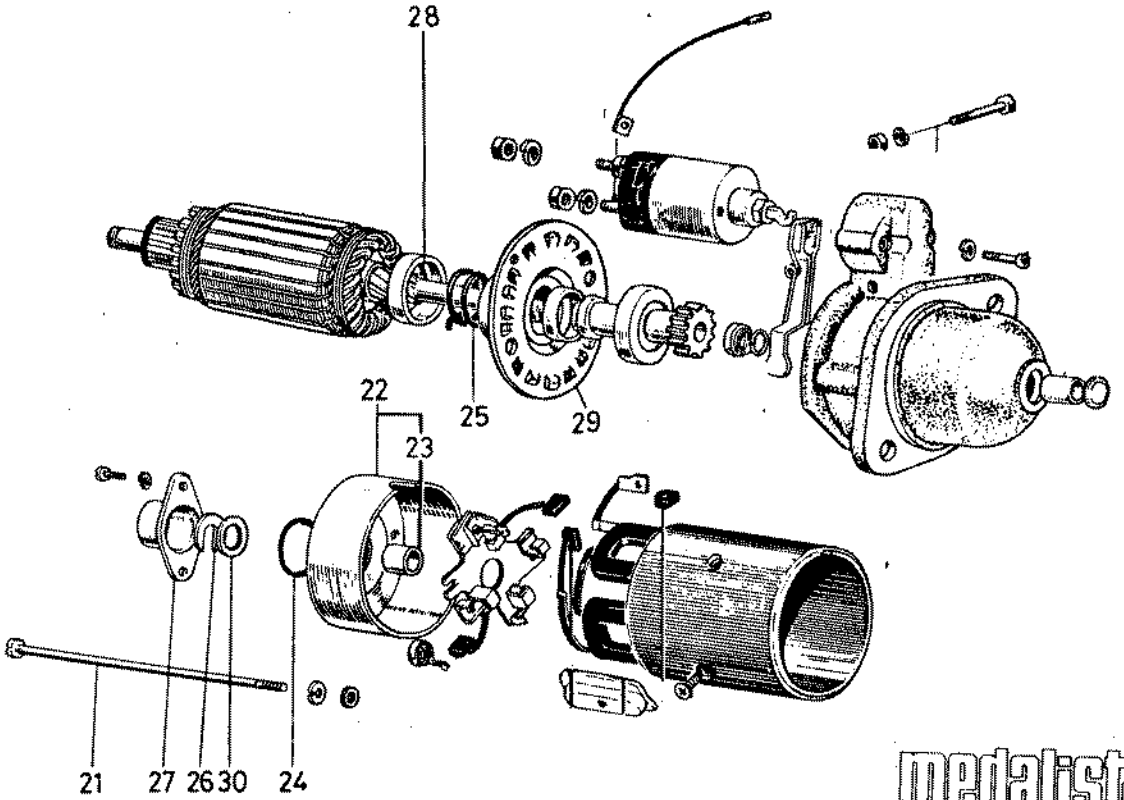

medalist
Universal Motors

ITEM	PART NO.	DESCRIPTION	UNIT
25	299784	Spring, Return	1
26		Washer	1
27		Cap, End Frame	1
28		Holder, Spring	1
29		Bearing, Center	1
30		Washer, Plain	
31			
32			
33			
34			
35			
36			
37			
38			
39			
40			
41			
42			
43			
44			
45			
46			
47			
48			

OIL FILTER 2 GROUP

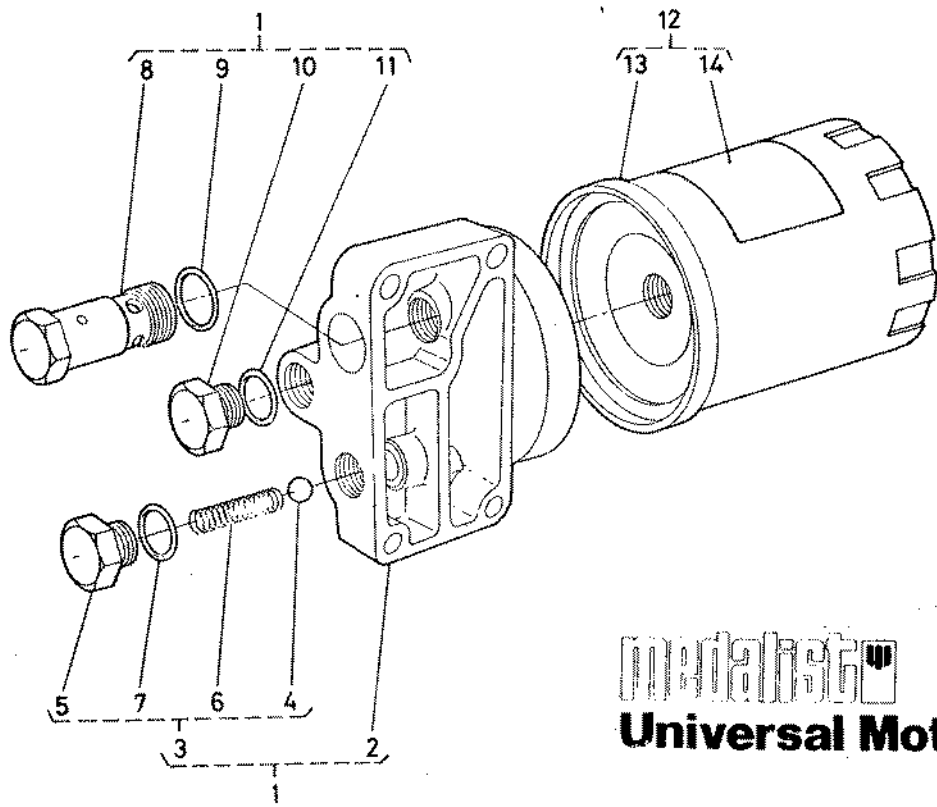

Universal Motors

ITEM	PART NO.	DESCRIPTION	UNIT
1		Assembly, Filter Cover	1
2		Cover	1
3		Safety Valve Assembly	1
4		Safety Valve	1
5		Plug	1
6		Spring	1
7		O Ring	1
8		Releaf Valve Assembly	1
9		O Ring	1
10		Plug	1
11		O Ring	1
12	298852	Cartridge Assembly	1
13		Cartridge Filter	1
14		Label, Oil Filter	1
15			
16			
17			
18			
19			
20			
21			
22			
23			
24			

WATER PUMP GROUP

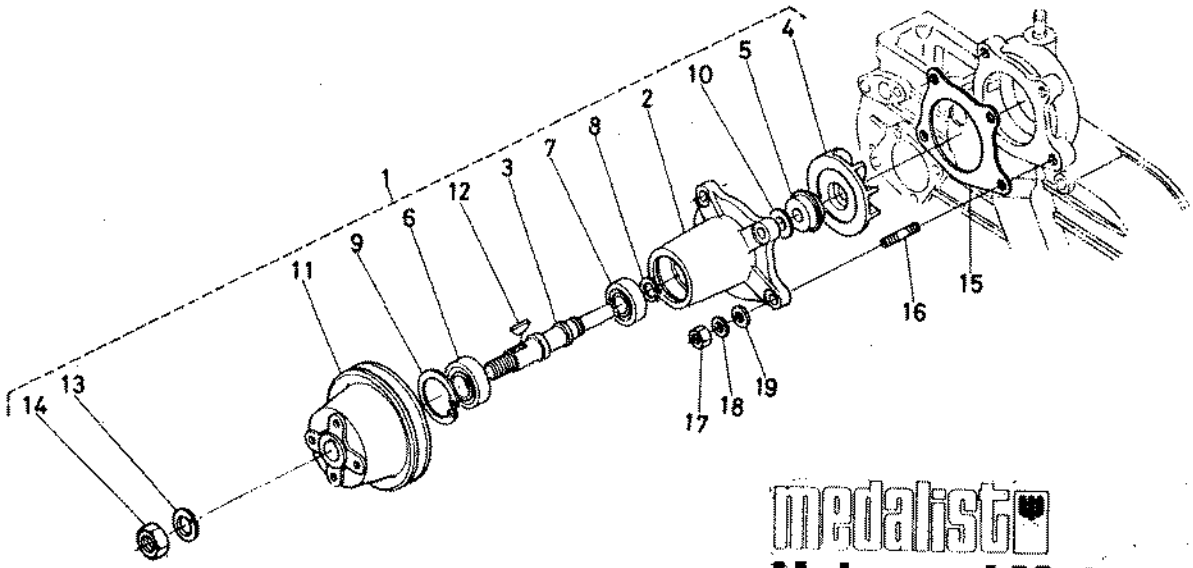

medalist
Universal Motors

ITEM	PART NO.	DESCRIPTION	UNIT
1	298845	Assembly, Water Pump	1
2		Water Pump Body	1
3		Shaft, Water Pump	1
4		Impeller, Water Pump	1
5		Set Seal	1
6		Bearing, Ball	1
7		Bearing, Ball	1
8		Cir-Clip, External	1
9		Cir-Clip, Internal	1
10		Slinger	1
11		Pulley, Fan	1
12		Key, Woodruff	1
13		Washer, Spring	1
14		Nut	1
15	298846	Gasket, Water Pump	1
16		Stud	4
17		Nut	4
18		Washer, Spring	4
19		Washer, Plain	4
20			
21			
22			
23			
24			

WATER PUMP GROUP

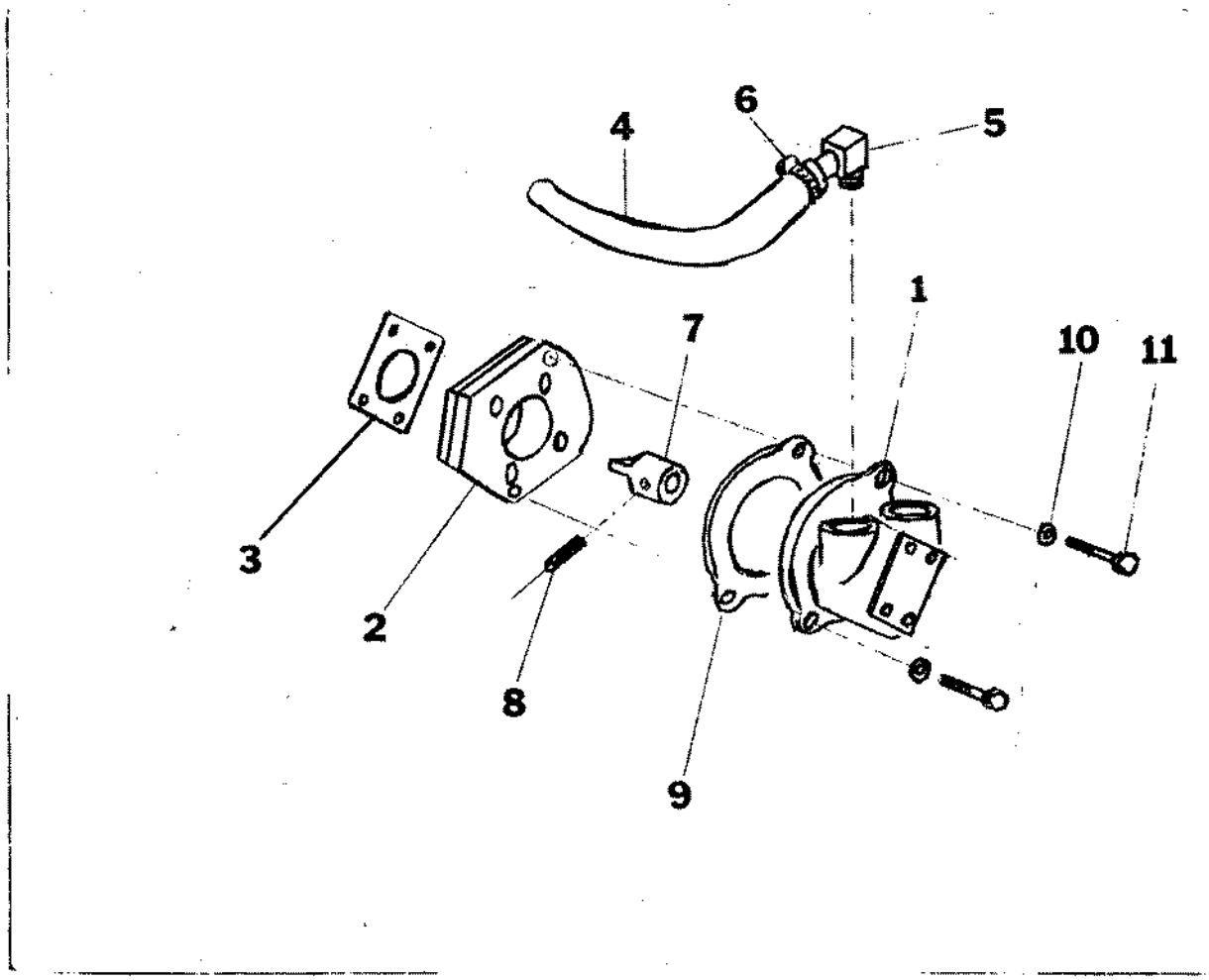

ITEM	PART NO.	DESCRIPTION	UNIT
1	298890	Pump - Oberdorfer	1
2	298477	Adapter Plate	1
3	298485	Gasket, Adapter Plate	1
4	299162	Hose 1/2" Pump to Engine	1
5	241019	Fitting 90° 1/2" Hose	1
6	374747	Clamp 1/2" Hose	1
7	298478	Coupling Adapter	1
8	230371	Roll Pin 3/16 Dia x 7/8 Lg.	1
9	261044	Gasket	1
10	285305	Washer	2
11	231080	Cap Screw	2
12	298889	Cam	1

When replacing pump impeller order "water pump repair kit" Part No. 298416-A. Kit consists of: impeller, lip seal, gasket and retaining ring.

256737	Complete Gasket Set	Optional
298904	Spare Parts Kit	Optional
262249	Hand Sump Pump	1

FUEL FILTER GROUP

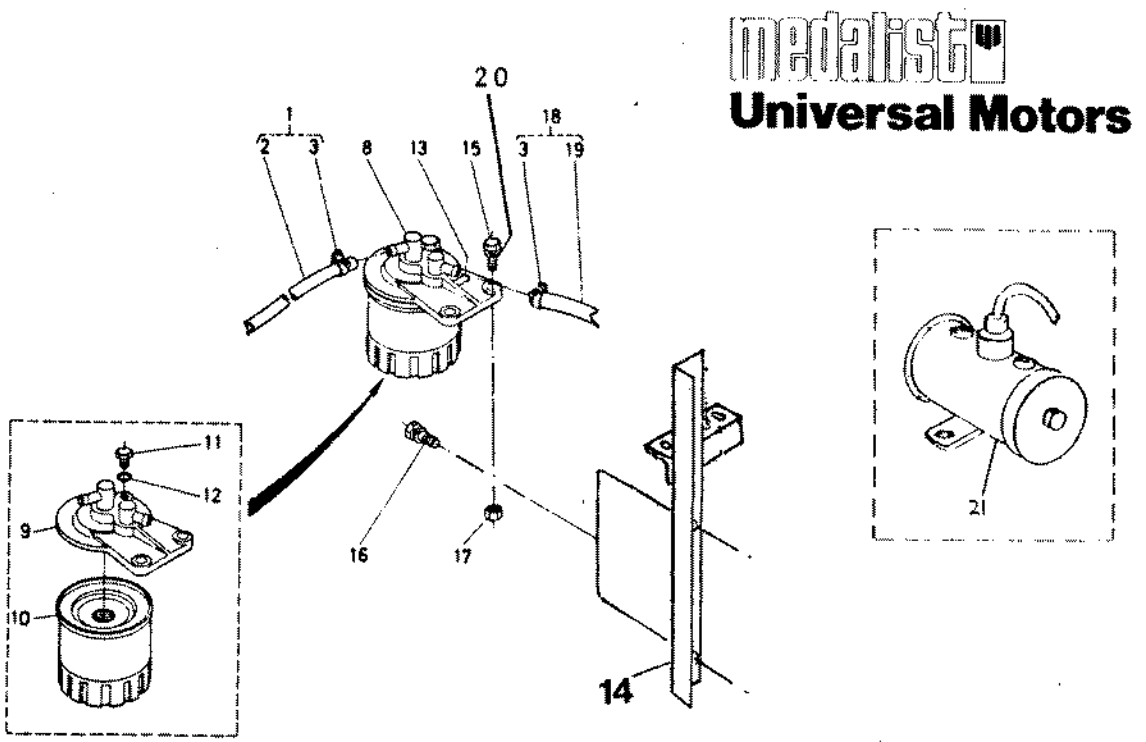

ITEM	PART NO.	DESCRIPTION	UNIT
1		Fuel Pipe Assembly	1
2		Pipe, Fuel	1
3	298605-A	Clip, Pipe	4
4		Gasket	2
5		Joint, Fuel Pipe	1
6		Pipe, Fuel	1
7		Clip, Pipe	2
8	298853	Fuel Filter Assembly	1
9		Cover, Filter	1
10	298854	Element, Filter	1
11		Plug, Filter Breather	1
12		O Ring	1
13		Mark, Form	1
14	298836	Bracket, Filter	1
15	231059	Bolt	2
16	298973	Bolt	2
17	230142	Nut	2
18		Fuel Pipe Assembly	1
19	298567	Pipe, Fuel Filter To Engine	1
20	298461	Washer, Lock	1
21	299736	Electric Fuel Pump	1
22			
23			
24			

AIR CLEANER GROUP

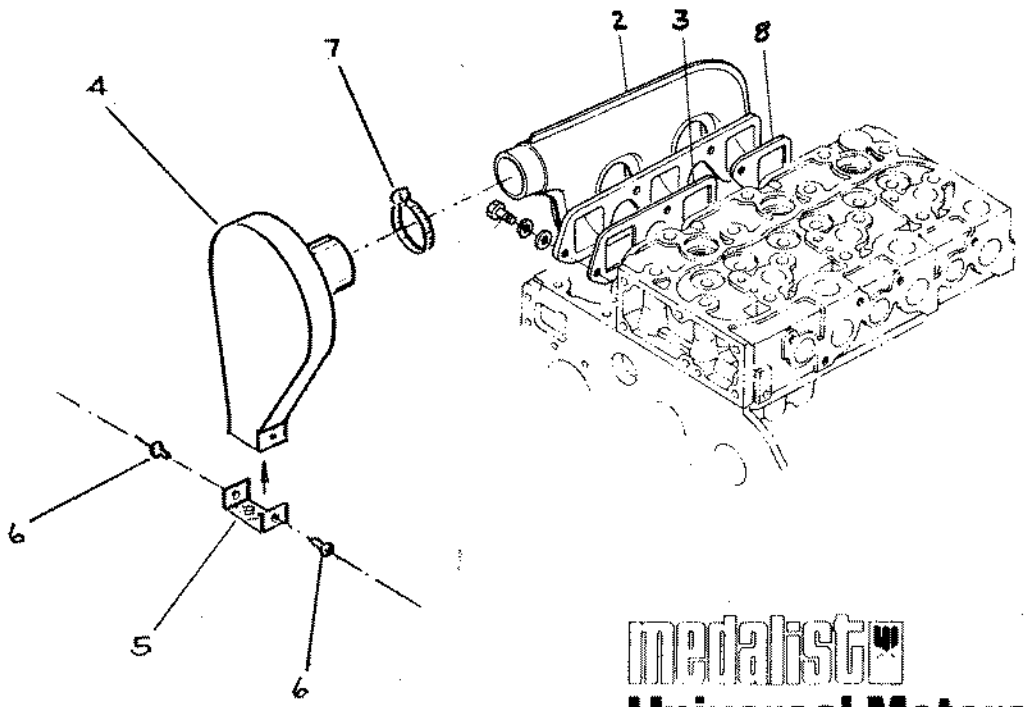

medalist
Universal Motors

ITEM	PART NO.	DESCRIPTION	UNIT
1		Air Cleaner Assembly	1
2	298866	Manifold, Inlet	1
3	298865	Gasket, Inlet Manifold	1
4	298548-C	Air Silencer	1
5	298563	Screen, Air Silencer	1
6	239158	Pop Rivet	2
7	298604	Clamp, Adjustable	1
8	298705	Gasket, Manifold	1
9			
10			
11			
12			
13			
14			
15			
16			
17			
18			
19			
20			
21			
22			
23			
24			

medalist

Universal Motors

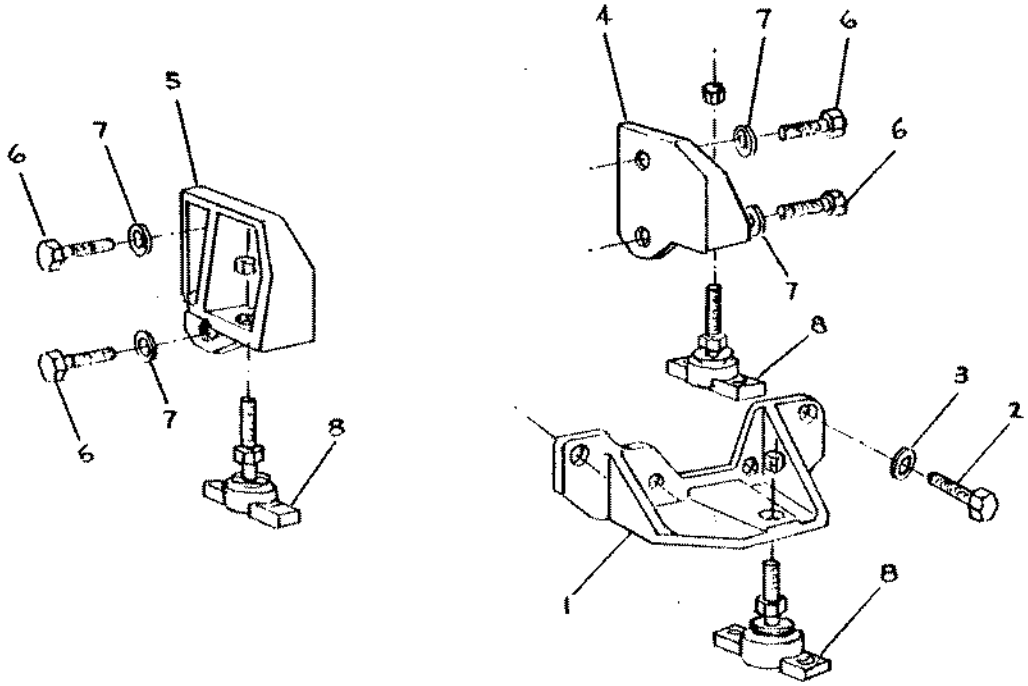

ITEM	PART NO.	DESCRIPTION	UNIT
1	298515-C	Mounting Bracket - Front	1
2	298506	Hex Hd Cap Screw (10MM x 3MM Lg.)	4
3	298463	Lock Washer, Split (10MM Screw)	4
4	298517-C	Mounting Bracket - Rear L.H.	1
5	298519-C	Mounting Bracket - Rear R.H.	1
6	298464	Hex Hd Cap Screw (14MM x 35MM Lg.)	4
7	298465	Lock Washer, Split (14MM Screw)	4
8	298232-B	Flexible Mount	3
9			
10			
11			
12			
13			
14			
15			
16			
17			
18			
19			
20			
21			
22			
23			
24			

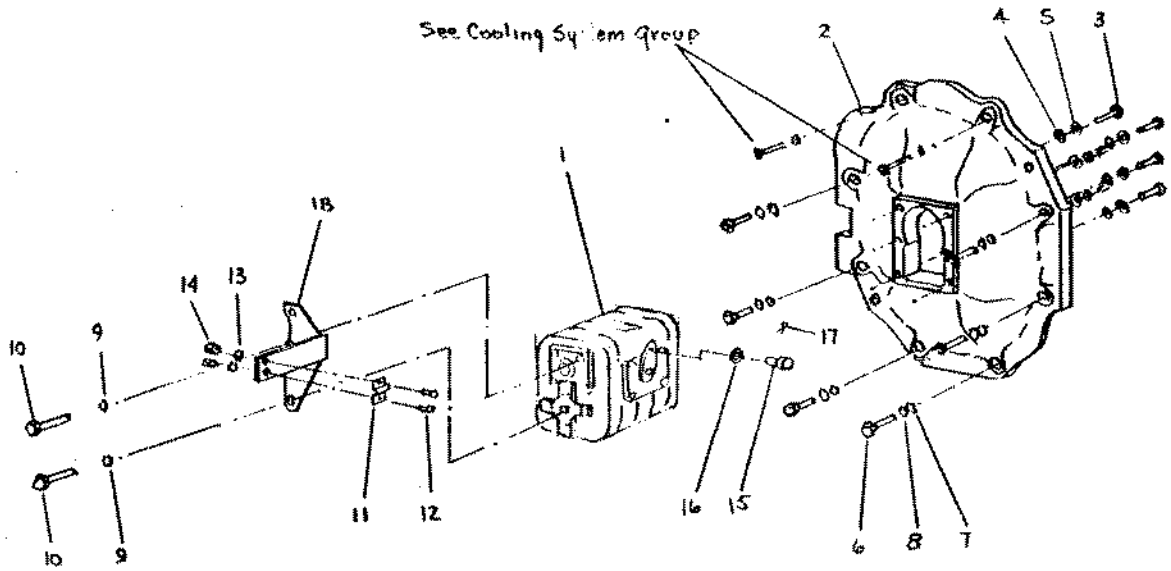

medalist
Universal Motors

ITEM	PART NO.	DESCRIPTION	UNIT
1	298453	Reverse Gear Box, Complete	1
2	298523-D	Bell Housing, Reverse Gear	1
3	298468	Hex Hd Cap Screw(8MM x 1.25P x 25MM Lg.)	6
4	231875	Flat Washer, SAE 5/16	6
5	298461	Washer, Lock (8MM Screw)	6
6	298616	Hex Hd Cap Screw (10MM x 50MM Lg.)	6
7	298456	Flat Washer (.413 I.D.)	6
8	298463	Lock Washer (10MM Screw)	6
9	298461	Lock Washer (8MM Screw)	2
10	287895	Hex Hd Cap Screw(8MM x 1.25 x 16MM Lg.)	2
11	298897	Clamp, Shift Cable To Shift Control Brkt.	1
12	231224	Round Hd Mach Screw(#10-32 x 1/2 Lg.)	2
13	231890	Lock Washer, Split (#10 Screw)	2
14	230138	Hex Nut (#10-32)	2
15	298898	Pivot, Shift Cable To Reverse Gear Lever	1
16	231874	Flat Washer SAE 1/4	1
17	230281	Cotter Pin 3/32 x 1/2"	1
18	298896-C	Bracket, Shift Control Mt'g. Cable	1
19	298454	Damper (NOT SHOWN)	1
20	298505	Damper Mounting Plate (NOT SHOWN)	1
21			
22			
23			
24			

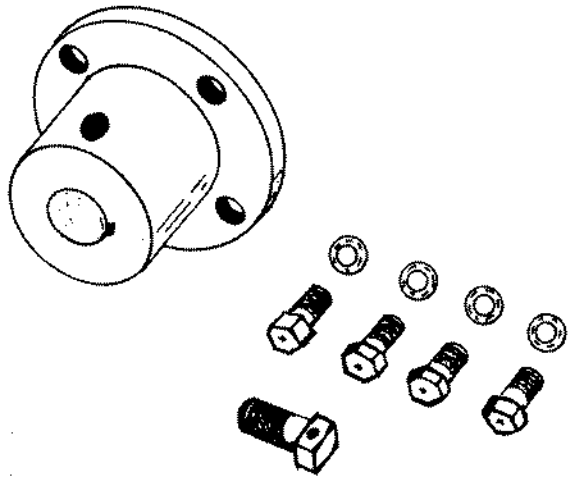

ITEM	PART NO.	DESCRIPTION	UNIT
	299640	Rigid Coupling 3/4"	
	299641	Rigid Coupling 7/8"	
	299642	Rigid Coupling 1"	
	299643	Rigid Coupling 1-1/8"	
	299644	Rigid Coupling 1-1/4"	
	238162	Screw-Sq.Hd. 3/8 - 16 x 1"	2
	239548	Screw-Hex Hed. 3/8 - 24 x 1-1/4"	4
	231910	Washer-Shake Proof	4
	230189	Nut-Jam 3/8-24	4
	298568	Flexible Coupling 3/4" - 1/4" Key	
	298569	Flexible Coupling 7/8" - 1/4" Key	
	298484	Flexible Coupling 1" - 1/4" Key	
	298570	Flexible Coupling 1-1/8" - 1/4" Key	
	299300	Flexible Coupling 1-1/4" - 5/16" Key	

medalist
Universal Motors

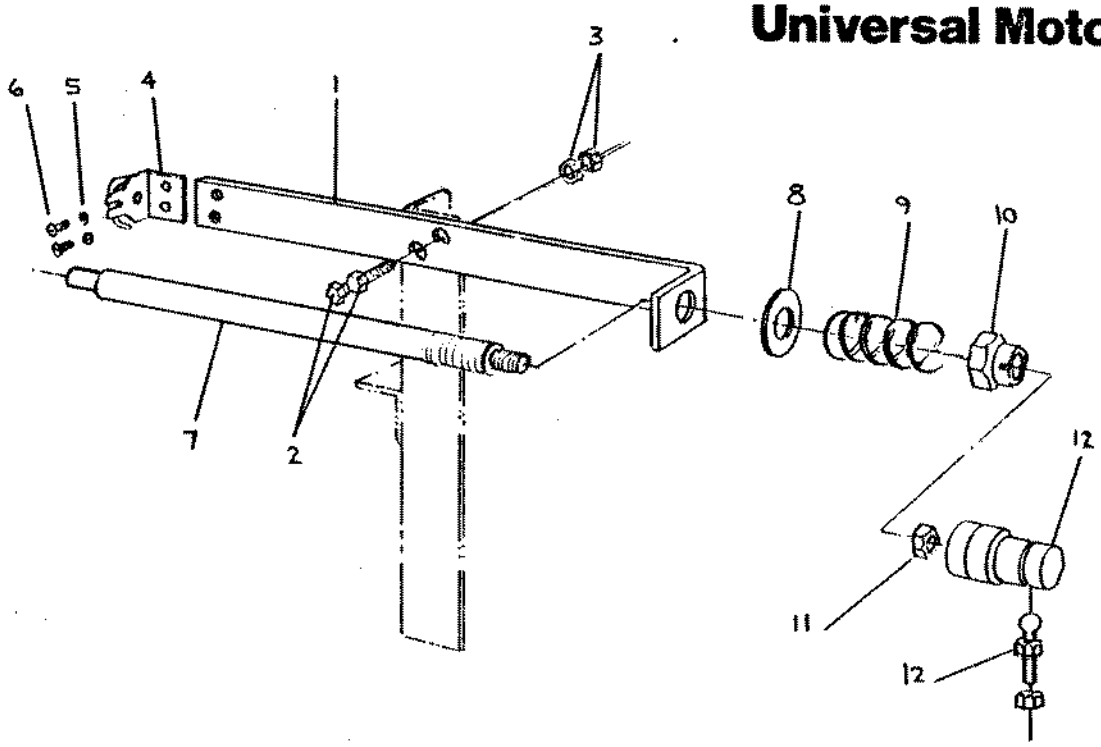

ITEM	PART NO.	DESCRIPTION	UNIT
1	298637-B	Bracket, Throttle Cable Mtg.	1
2	231035	Hex Hd Cap Screw (1/4-20 x 3/4 Lg.)	2
3	230257	Lock Nut, Flexlock (1/4-20)	2
4	298630	Cable Hook Clip	1
5	231890	Lock Washer, Split (#10)	2
6	231224	Rd Hd Mach Screw (#10-32 x 1/2" Lg.)	2
7	298638	Stud, Throttle Control Linkage	1
8	231875	Flat Washer SAE 5/16	1
9	298886	Spring, Throttle Stop	1
10	298610	Lock Nut, Flexlock (5/16 x 24)	1
11	230138	Hex Nut (#10-32)	1
12	298629	Ball Joint, Throttle Linkage	1
13			
14			
15			
16			
17			
18			
19			
20			
21			
22			
23			
24			

DYNAMO GROUP

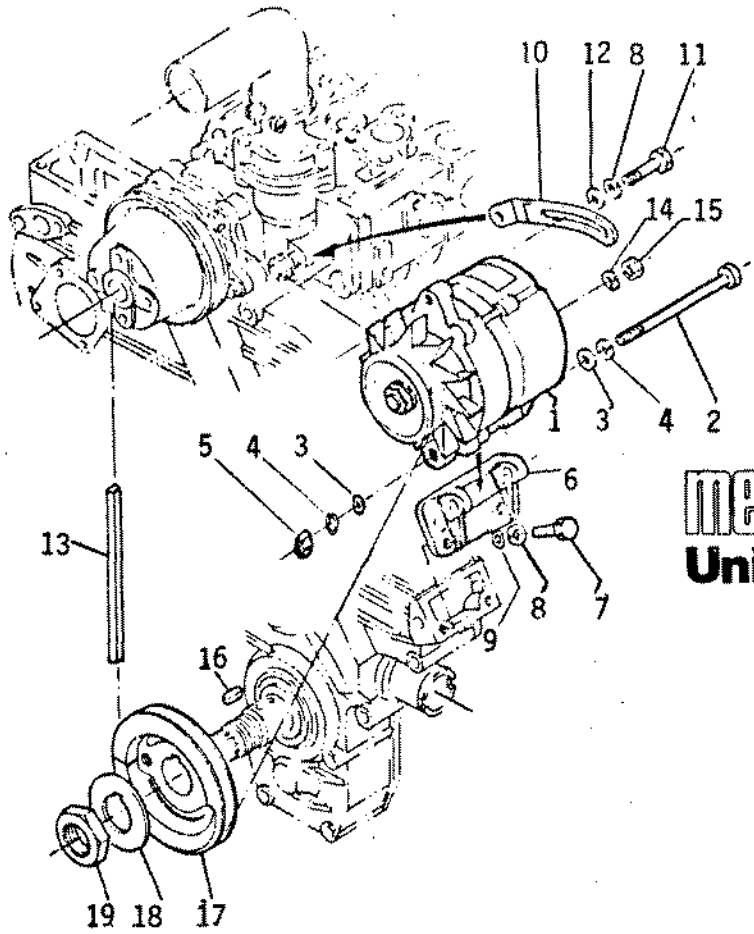

medalist
Universal Motors

ITEM	PART NO.	DESCRIPTION	UNIT
1	298972-A	55 AMP Alternator & Tach A.C. Tap Kit	1
2	231093	Hex HD Cap Screw (3/8-16 x 3-3/4 Long)	1
3	231876	Washer, SAE 3/8"	2
4	285305	Washer, Split Lock 3/8"	1
5	230144	Hex Nut, 3/8-16	1
6	298521	Alternator Mounting Bracket	1
7	298468	Hex HD Cap Screw (8 mm x 1.25 x 25 mm)	2
8	298461	Washer Lock (8 mm Screw)	3
9	231875	Washer, Flat SAE 5/16	2
10	298471	Alternator Adjusting Arm	1
11	231057	Hex HD Cap Screw (5/16-18 x 3/4" Long)	1
12	231856	Washer, Flat Plain 5/16"	1
13	204002	"V" Belt	1
14	(Supplied with	Washer, Spring	1
15	Alternator)	Nut	1
16		Key, Feather	1
17		Pulley	1
18	298837	Washer, Crankshaft	1
19	298836	Nut, Crankshaft	1
20			
21			
22			
23			
24			

EXHAUST MANIFOLD GROUP

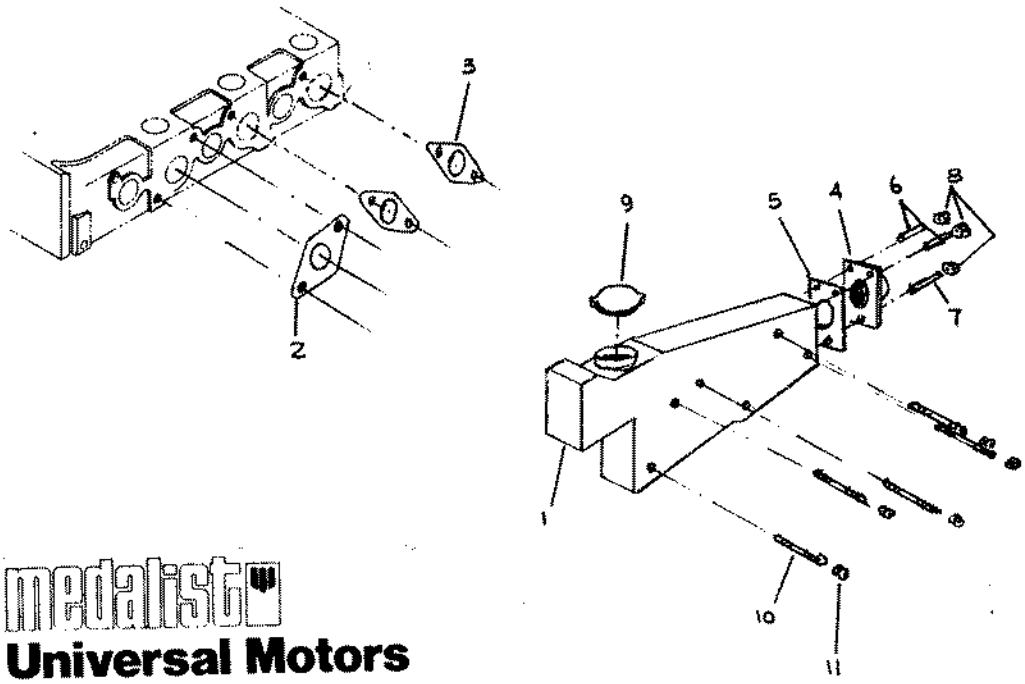

medalist
Universal Motors

ITEM	PART NO.	DESCRIPTION	UNIT
1	298597	Manifold	1
2	298707	Gasket, Exhaust Manifold	1
3	298708	Gasket, Exhaust Manifold	2
4	298599	Exhaust Flange, Manifold	1
5	298600	Gasket, Exhaust Flange	1
6	276440	Stud, Exhaust Flange Mtg(3/8-16 x 1-7/16Lg.)	2
7	298974	Stud, Exhaust Flange Mtg(3/8-16 x 2-5/8 Lg.)	1
8	230147	Hex Nut, Exhaust Flange Mtg. (3/8-24)	3
9	298576	Radiator Cap, Pressurized 7# PSI	1
10	298635	Stud, Exhaust Manifold(8MM x 1.25P x 102MM)	6
11	298466	Hex Nut, Exhaust Manifold(8MM x 1.25P)	6
12			
13			
14			
15			
16			
17			
18			
19			
20			
21			
22			
23			
24			

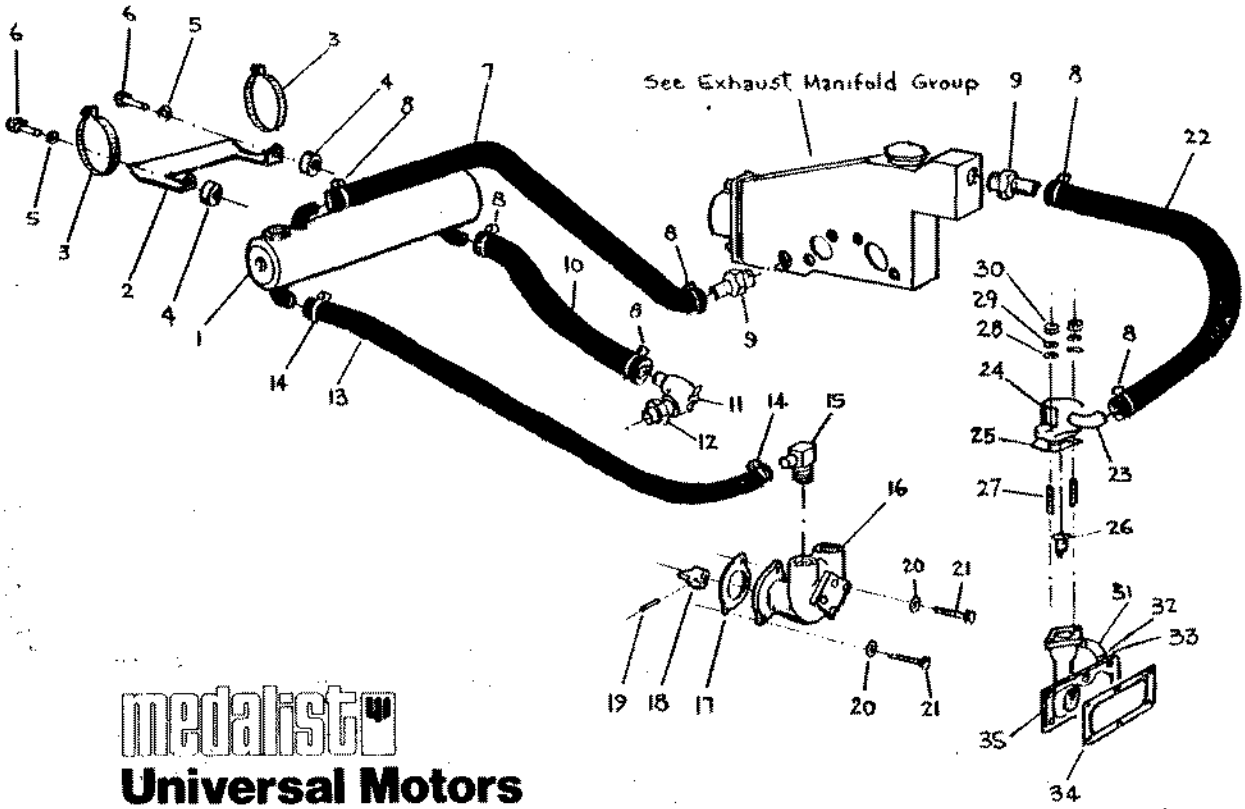

medalist
Universal Motors

ITEM	PART NO.	DESCRIPTION	UNIT
1	299049	Heat Exchanger	1
2	298632-B	Support Bracket	1
3	294386	Clamp, Heat Exchanger	2
4	298634	Spacer	2
5	298463-A	Washer, Lock Split (10MM)	2
6	298617-A	Hex Hd Cap Screw (10MM x 1.25P x 55MM Lg.)	2
7	298646	Hose 97/8 I.D. x 8-1/2 Lg.)	1
8	298648	Hose Clamp	6
9	286075	Hose Connector	2
10	298891-A	Hose (7/8 I.S. x 16 Lg.)	1
11	239138	Drain Cock 1/8"	1
12	298641	Hose and Drain Adaptor	1
13	298892-A	Hose (1/2 I.D. x 21-1/2 Lg.)	1
14	374747-A	Hose Clamp	2
15	241019	Hose Fitting 90" x 3/8	1
16	298890	Raw Water Pump	1
17	261044-A	Gasket, Raw Water Pump Mt'g.	1
18	298478	Coupling, Water Pump	1
19	230371	Roll Pin, (3/16 x 7/8 Lg.)	1
20	285305	Washer, Lock Split 3/8	2
21	231080	Hex Hd Cap Screw (3/8-16 x 1" Lg.)	2
22	298645	Hose (7/8 I.D. x 4-3/4 Lg.)	1
23	298644	Hose Connector	1
24	298583-B	Thermostat Housing	1

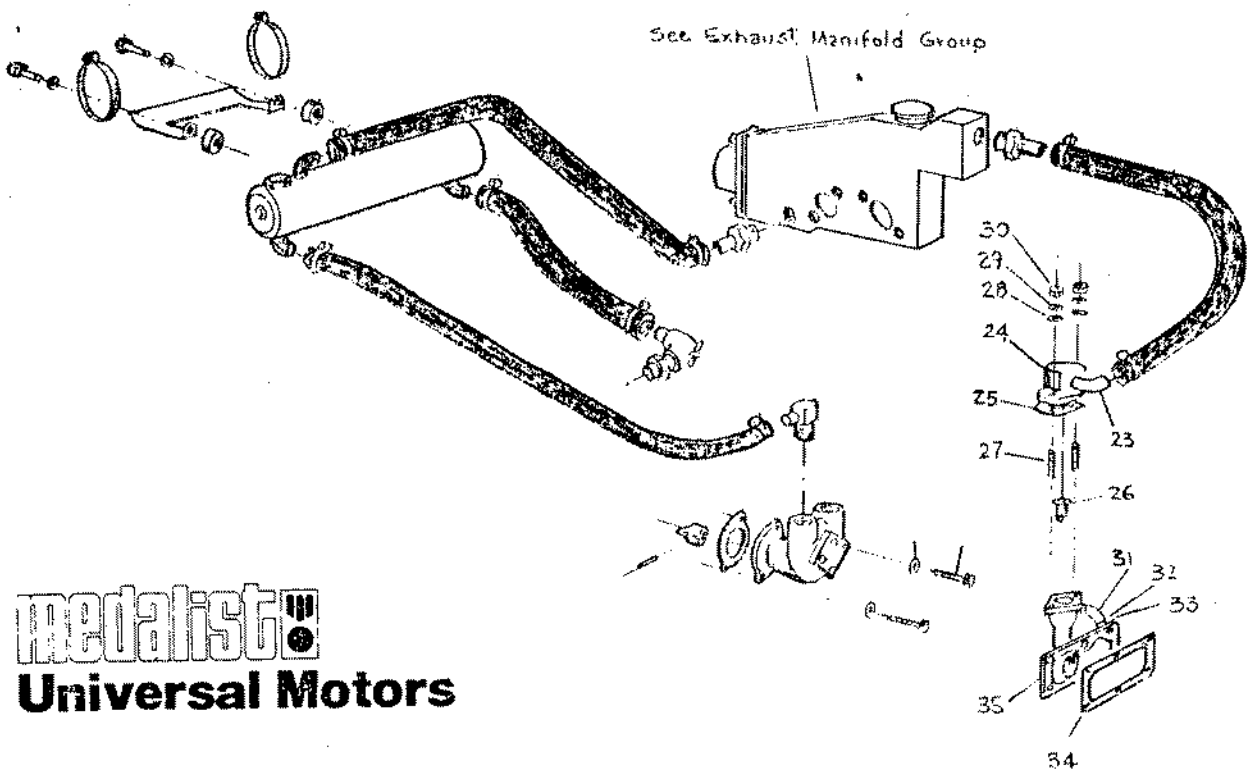

Medalist Universal Motors

FROM SERIAL NO. 230101 315000 TO 230125 315022

ITEM	PART NO.	DESCRIPTION	UNIT
25	298843	Gasket, Thermostat Housing	1
26		Thermostat	1
27	N/A	Stud	2
28	N/A	Washer, Plain	2
29	N/A	Washer, Lock Split	2
30	N/A	Hex Nut	2
31	298841	Hose, Water Return	1
32	298842	Clamp, Hose	2
33	298840	Pipe, Water Return	1
34	298839	Gasket, Water Flange	1
35	298838	Flange, Water	1
36	299066	Temperature Sender	1
37			
38			
39			
40			
41			
42			
43			
44			
45			
46			
47			
48			

INSTRUMENT PANEL

PART NO.	DESCRIPTION	UNIT
298559	Instrument Panel Complete	Optional
298572	Panel	1
298385	Ammeter	1
299240	Oil Indicator Light	1
298383	Temperature Gauge	1
299190	Ignition Switch	1
299650	Blower Switch	1
299754	Blower Switch Plate	1
299839	Glo Plug Switch	1
299755	Glo Plug Switch Plate	1
299756	Caution Plate	1
299651	Fuse - 10A	1
299066	Temperature Sender - 1/4"	1
298584	Panel Harness	1
298585	10 Ft. Extension Harness	1
298586	Engine Wire Harness	1
	OR	
299732	Instrument Panel Complete with 299263 Tachometer and All Other Components Listed Above.	
298904	Spare Parts Kit	1
256737	Gasket Set	1

Universal Diesel

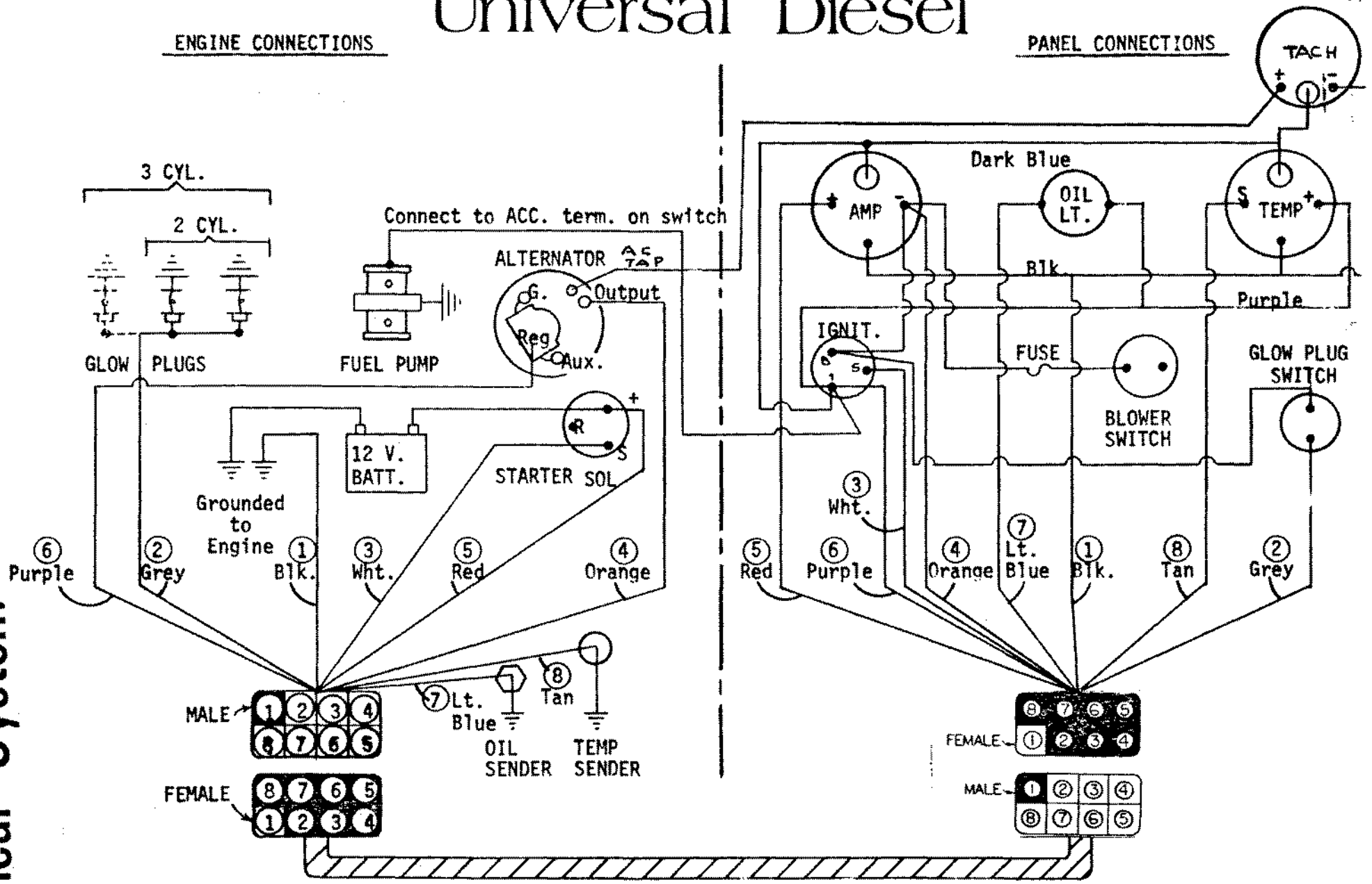

Electrical System

medalist

Universal Motors

1552 HARRISON ST. • P.O. BOX 2508

H, WI 54903 • (414) 231-4100 • CABLE: UNIMOT • TLX 262-717